GUILD ◆ EDITION

Woodsmith®

Woodsmith.com

Vol. 40 / No. 239

ELEGANT DISPLAY CABINET

Also:

Accurate Curves & Circles

Surfacing Small Stock

Must-Have Hand Saws

Make Square Holes the Easy Way

Woodsmith®

EDITOR Vincent Ancona
MULTIMEDIA EDITOR Phil Huber
ASSOCIATE EDITOR Robert Kemp
ASSISTANT EDITORS Erich Lage, Logan Wittmer
CONTRIBUTING WRITERS Bryan Nelson, Randall A. Maxey

EXECUTIVE ART DIRECTOR Todd Lambirth
SENIOR ILLUSTRATORS Harlan V. Clark, Dirk Ver Steeg, Peter J. Larson
SENIOR GRAPHIC DESIGNER Bob Zimmerman
GRAPHIC DESIGNER Becky Kralicek

CREATIVE DIRECTOR Chris Fitch
PROJECT DESIGNERS Dennis Volz, Dillon Baker
PROJECT DESIGNER/BUILDER John Doyle
CAD SPECIALIST Steve Johnson
SHOP CRAFTSMAN Dana Myers

SENIOR PHOTOGRAPHER Crayola England
ASSOCIATE STYLE DIRECTOR Rebecca Cunningham
SENIOR ELECTRONIC IMAGE SPECIALIST Allan Ruhnke
PRODUCTION ASSISTANT Minniette Johnson

FOUNDING EDITOR Donald B. Peschke
PUBLISHER Steven M. Nordmeyer
MANAGING DIRECTOR CLIENT SOLUTIONS Dean Horowitz
VICE PRESIDENT GENERAL MANAGER Peter H. Miller, Hon. AIA

HOME GROUP
ACTIVE INTEREST MEDIA

Woodsmith® (ISSN 0164-4114) is published bimonthly by Cruz Bay Publishing, Inc., 2143 Grand Ave, Des Moines, IA 50312.
Woodsmith® is a registered trademark of Cruz Bay Publishing.
Copyright© 2018 Cruz Bay Publishing, Inc. An Active Interest Media Company. All rights reserved.
Subscriptions: Single copy: $6.95.
Canadian Subscriptions: Canada Post Agreement No. 40038201. Send change of address information to PO Box 881, Station Main, Markham, ON L3P 8M6. Canada BN 82564 2911
Periodicals Postage Paid at Des Moines, IA, and at additional offices.
Postmaster: Send change of address to *Woodsmith*, Box 37274, Boone, IA 50037-0274.

Printed in U.S.A.

WoodsmithCustomerService.com

ONLINE SUBSCRIBER SERVICES

- **VIEW** your account information
- **PAY** your bill
- **RENEW** your subscription
- **CHANGE** your mailing or e-mail address

CUSTOMER SERVICE Phone: 800-333-5075 weekdays

SUBSCRIPTIONS
Customer Service
P.O. Box 842
Des Moines, IA 50304-9961
subscriptions@augusthome.com

EDITORIAL
Woodsmith Magazine
2143 Grand Avenue
Des Moines, IA 50312
woodsmith@woodsmith.com

ACTIVE INTEREST MEDIA

PRESIDENT & CEO **Andrew W. Clurman**
SENIOR VICE PRESIDENT, TREASURER & CFO **Michael Henry**
CHIEF INNOVATION OFFICER **Jonathan Dorn**
VICE PRESIDENT, AUDIENCE DEVELOPMENT **Tom Masterson**
VICE PRESIDENT, PEOPLE & PLACES **JoAnn Thomas**
AIM BOARD CHAIR **Efrem Zimbalist III**

from the editor

Sawdust

Way back in Woodsmith No. 65, we featured a child's rocking horse as our main project. (It's the one you see in the photo above). That rocking horse turned out to be one of our more popular projects, and we still get requests for the plans and patterns for it nearly 30 years later. I think a lot of woodworkers enjoyed building it for their children or grandchildren.

Despite its popularity, I've always felt that particular rocking horse design seemed a bit "wooden." The legs are straight and stiff, and there's not much life or animation to the horse. So when we decided to do another rocking horse in this issue of *Woodsmith*, Chris Fitch, our creative director, wanted to develop something with a little more motion to it. As you can see in the photo on the next page, he did a fantastic job. The legs are extended, and the head and neck are stretched forward, making the horse appear as if it's galloping along. The decorative paint job and yarn tail and mane complete the look. And as you'll see on page 40, it's also kid-approved.

LEARNING OPPORTUNITIES. On another note, I wanted to mention a couple of new learning opportunities that we're launching here at *Woodsmith*. The first is our series of online education courses. These multi-segment, in-depth courses are designed for experienced and new woodworkers alike. Each one focuses on a specific topic in woodworking and is taught by an expert in the field. The courses are divided into units and you can watch each one as many times as you want. Our first course, Table Saw Basics, is already online and open for registration. You can find out more about the class by going to *WoodsmithClasses.com.*

WEBINARS. The second project that we have underway is a series of online seminars (or *webinars*) that we're calling *Woodsmith Live*. Once a month, we'll be offering a live webinar on a specific woodworking topic. The topics will cover things such as how to use various tools, to joinery techniques, to finishing, to woodworking tips. Each webinar will be 45-60 minutes long, with an opportunity for questions at the end. If you can't join us for the live event, each webinar will be recorded and available for viewing after it airs. You can learn more about the *Woodsmith Live* webinars by going to *Woodsmith.com/live*.

Vince

Follow us:

WoodsmithMagazine
@WoodsmithMagazine
@WoodsmithMag

contents

No. 239 October/November 2018

Projects

weekend project

Spiral Candle Holder 16

This decorative candle holder is the perfect centerpiece for your holiday dinners. It's also a creative use for those special pieces of scrap wood that you've been hoarding.

shop project

Hobby Station 22

This tabletop workcenter can be customized for any number of hobbies. It offers multiple options for storage and organization of materials and tools.

designer project

Display Cabinet 28

Open glass shelves, a series of drawers and compartments, and a concealed tray provide the perfect place to store and display any collection of treasures or keepsakes.

heirloom project

Painted Rocking Horse 40

Based on a 19th-century design, this horse swings back and forth on bent steel rods that you fashion in your own shop. It offers plenty of woodworking challenges, as well.

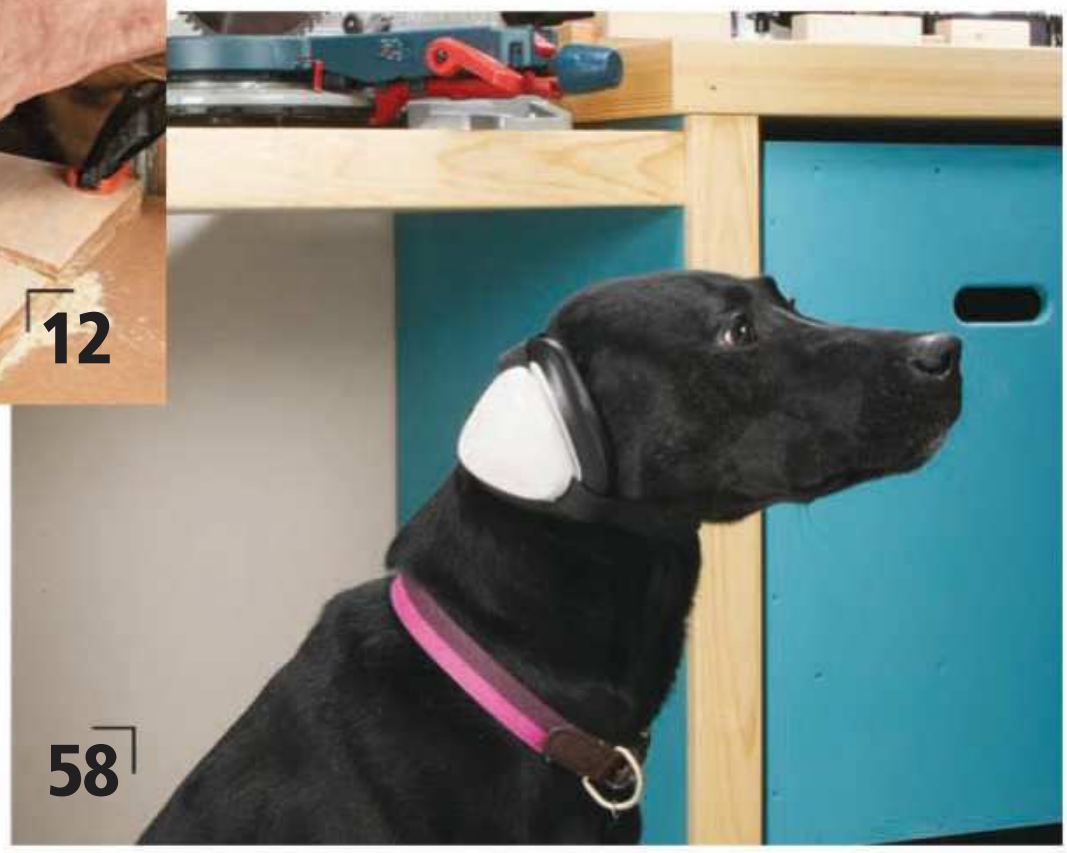

Departments

from our readers
Tips & Techniques 5

all about
Accent Woods 10

router workshop
Routing with Trammels 12

great gear
Safe-T-Planer 14

working with tools
Mortising Machines 54

in the shop
Pets in the Shop. 58

woodworking essentials
Must Have Hand Saws 60

tips from our shop
Shop Notes 64

questions & answers
Blade Hook Angles 66

from our readers

Tips & Techniques

Sandpaper Alignment Jig

I'm one of those woodworkers cursed with having to wear bifocals. So it's really tough for me to get the holes in the sanding disks lined up with the dust collection ports on a random-orbit sander and to get them back in the container they came in. The simple jig shown here solved both problems.

A JIG FOR LOADING & STORAGE. The jig is built using a couple of small parts of hardboard, along with some dowels. Using a sanding disk, I marked the location of the dust collection holes on both the pieces of hardboard. One will become the top and the other will be the base. After drilling holes in each, I installed dowels into the base holes. To aid sliding disks on, I rounded over the top of the dowels with some sandpaper.

STORAGE AND LOADING. To store the disks, I simply fit them over the dowels (sandpaper side down) and slide the top down over them. They stay clean and organized, and the cover keeps them flat.

When I need to install a new sanding disk, I remove the top, position the sander's dust ports over the dowels, then slide the sander down until the pad's "hooks" engage the disk's loops. The holes align perfectly, the disk stays in place (because it's clean), and I'm quickly back in action.

George E. Long
Macon, Missouri

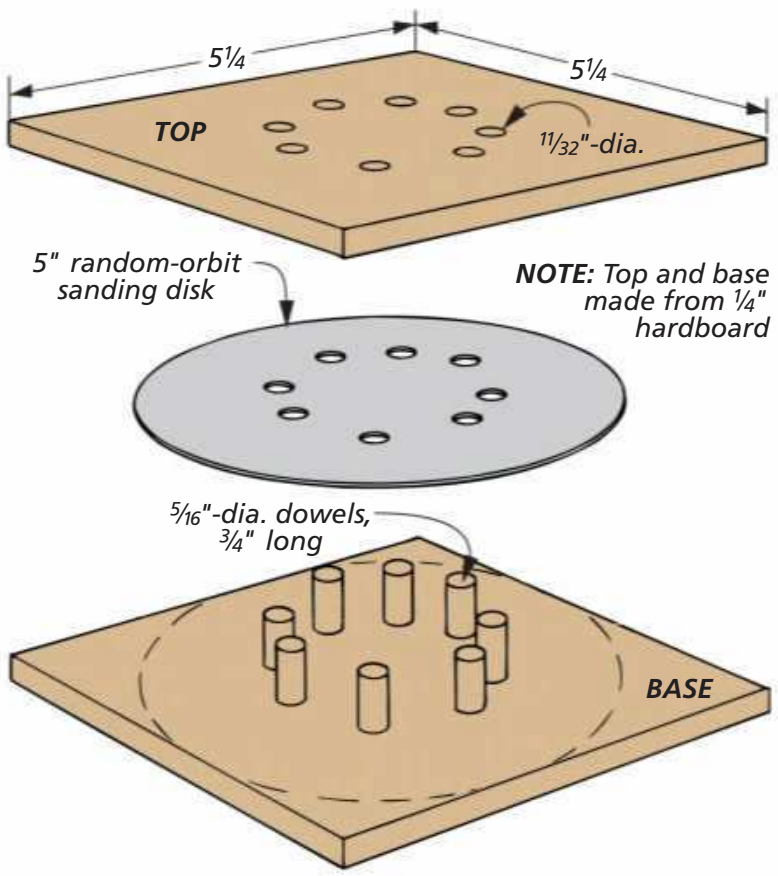

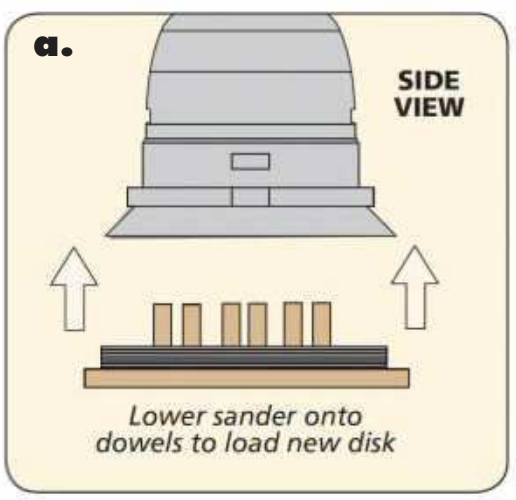

Win This Forrest Blade

Simply send us your favorite shop tips. If your tip or technique is selected as the featured reader's tip, you'll win a *Forrest Woodworker II* blade. To submit your tip or technique, go to *SubmitWoodsmithTips.com*. There you can upload your tips and photos for consideration.

The Winner!

Congratulations to Tom Moss, the winner of this *Forrest Woodworker II*. To find out how you can win this blade, check out the information at left.

Illustrator: Becky Kralicek

Waxing Screws

Driving screws into hardwood often causes strain and stress on the screw and makes it hard to drive. By adding a small amount of lubrication, such as wax, to each screw, it makes driving them much easier. But using a block of wax never seemed to work well for me. The dry wax didn't stick well and often flaked off.

After seeing a wax pot that my wife brought home, I had the idea to use one in my shop to coat screws. These types of pots are designed to heat scented wax, like potpourri. I can reuse any wax that my wife was melting, and also melt old candles, or fresh wax. When the wax is hot, I simply dip a screw tip in it to coat it with a thin layer of wax that doesn't flake off. Then, the screws drive with less effort.

Tom Moss
Bradenton, Florida

QUICK TIPS

Junk Mail Spreader. *Dennis Volz* of *Denver, CO*, saves old gift cards and promotional cards out of his junk mail to use as glue spreaders. To dress up the edge for even glue spreading, he uses a pair of pinking shears to cut a serrated edge on the cards.

Don't Lose Drivers. *Lou LaFrate* of *Vail, AZ*, was frustrated when he had to keep searching for the correct driver every time he picked up a box of fasteners. Now, Lou has started storing the drivers in a small container within the box of fasteners. That way, the correct driver is always close at hand.

Rack Helper. *Dana Meyers* of *Des Moines, IA,* uses a large hose clamp to tighten up the rack on his drill press. By attaching the clamp in the middle of the rack, it tightens down the distorted rack and keeps it from spinning or slipping when he moves his table.

Magnetic Pick-Up Tool. *Eugene Sydor* of *Walworth, NY,* found that he was often dropping the nut and flange from his table saw into the cabinet. To ease the struggle of fishing them from the pile of sawdust, he uses a rare-earth magnet attached to the end of a dowel.

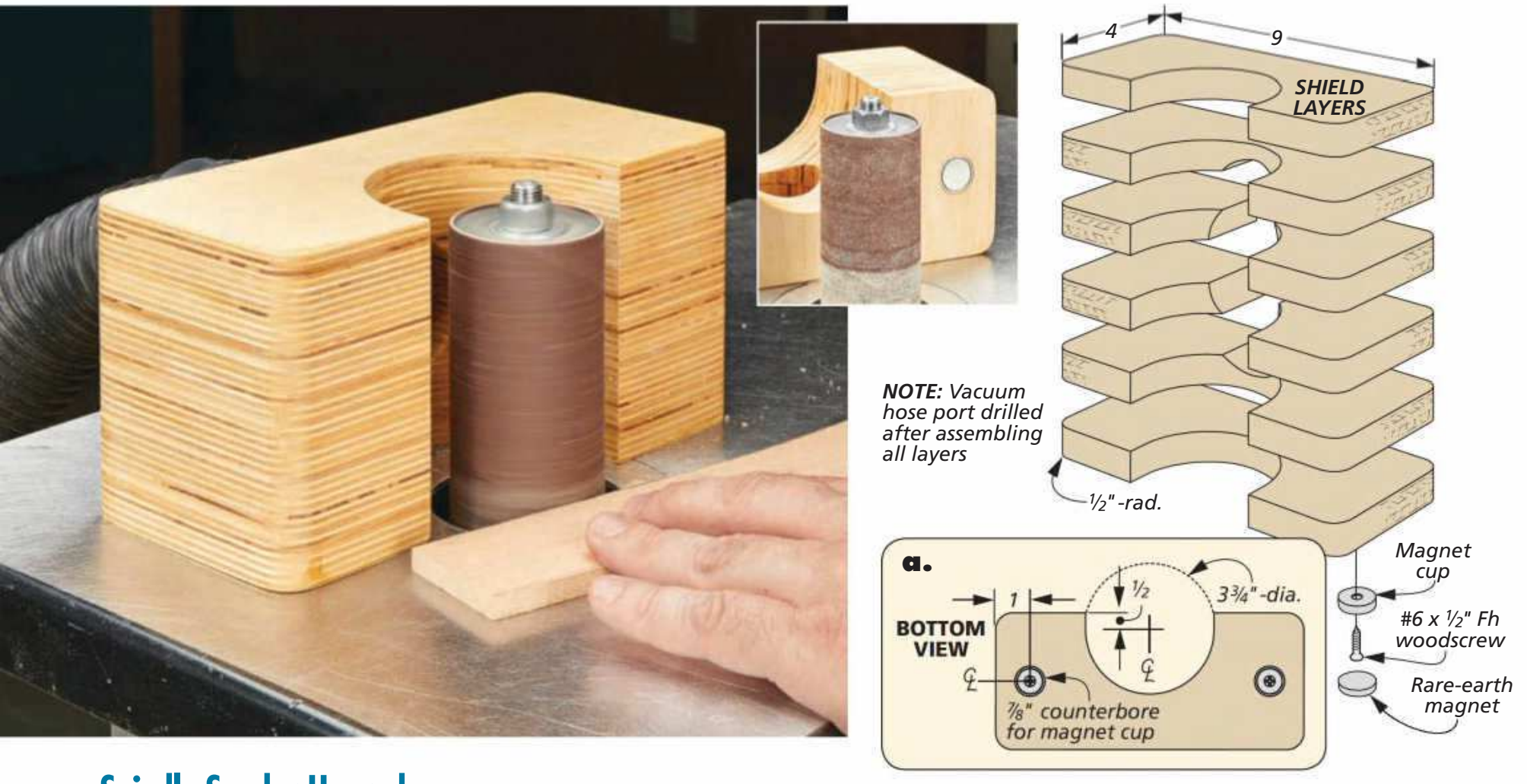

Spindle Sander Upgrade

One tool that I had never dreamed I would use as much as I do is my spindle sander. It's great for getting into tight radii and helping smooth out curves. The dust collection that came with it is lackluster, however. I was always left with a fine layer of dust covering everything within reach of the sander. That's when I decided to come up with the dust helper you see here.

MOVABLE. The dust collection shield has one unique feature that makes it work well. That feature is a pair of rare-earth magnets in the base. Depending on what I'm sanding, I can position the shield where I need it. A hole on the back side is sized to fit my shop vacuum hose. The combination of the shop vacuum and the ease of positioning the shield collects almost all of the dust.

LAYERS OF PLYWOOD. The shield is built by gluing up multiple layers of plywood, making sure it's taller than the spindle. The first layer is shaped at the drill press, and each layer is trimmed using a flush-trim bit (How-To box below). Finally, a hole for the shop vacuum hose is drilled and magnets installed in the base.

Arthur Schauer
Seward, Nebraska

How-To: MAKE THE SHIELD

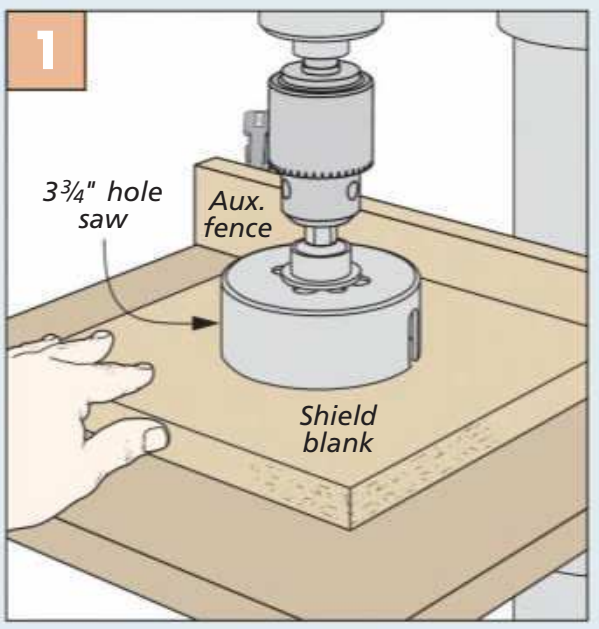

One Blank. Using a hole saw, cut out the hole in an oversized plywood blank. Then, trim the blank to shape.

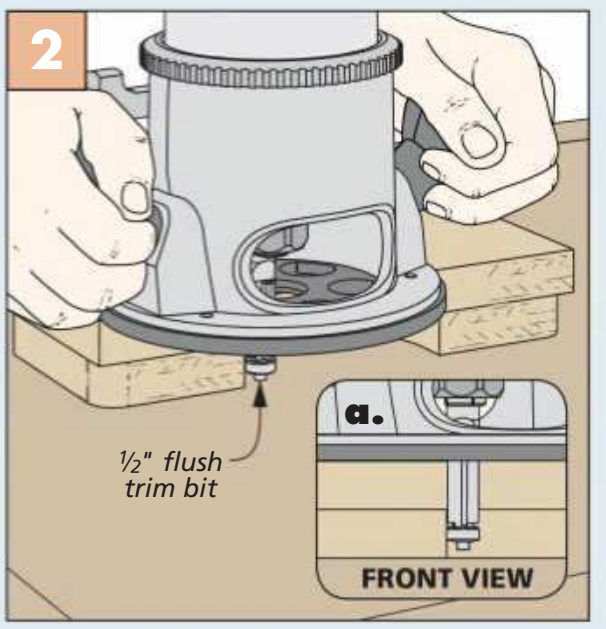

Rout Layers. Add additional layers to the first blank. Using a flush-trim bit, trim each layer to match the previous.

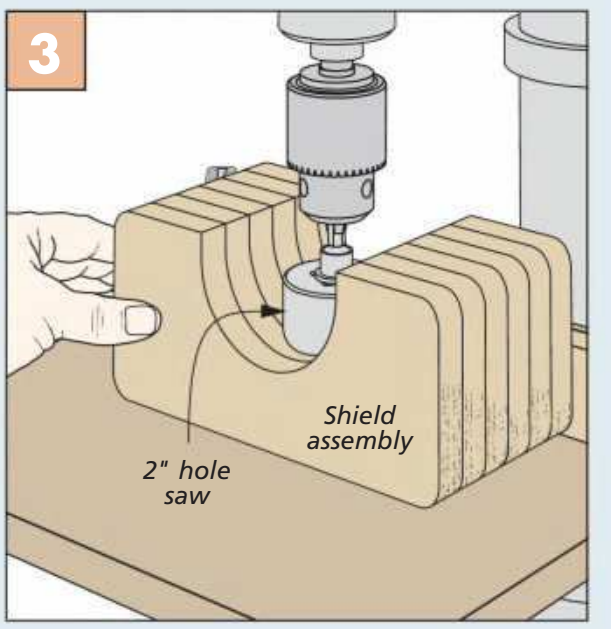

Dust Port. After all the layers are trimmed and the glue is dry, drill a dust collection port using a hole saw.

Bucket Seats

My grandchildren often enjoy accompanying me into the shop. To make sure they have a comfortable place to play while I work, I built them a small table and chair set using some spare five-gallon buckets I had lying around.

CANS INSIDE BUCKETS. The construction of the seats starts by using a hole saw to define the corners of the seat back cutout and then removing the waste with a jig saw. The plywood seat for the chair is supported by an empty paint can. The paint can is attached to the seat and inserted into the bucket.

The table consists of a plywood top supported on a five-gallon bucket. The lid is simply cut to size, and then it's attached by sandwiching plywood around the bucket lid. The lid, with attached top, snaps onto the bucket. Best of all, I can store their toys inside the table bucket.

Wayne Wilkerson
Toledo, Iowa

DIGITAL WOODSMITH

SUBMIT TIPS ONLINE

If you have an original shop tip, we would like to hear from you and consider publishing your tip in one or more of our publications. Jump online and go to:

SubmitWoodsmithTips.com

You'll be able to tell us all about your tip and upload your photos and drawings. You can also mail your tips to "Woodsmith Tips" at the editorial address shown on page 2. We will pay up to $200 if we publish your tip.

RECEIVE FREE ETIPS BY EMAIL

Now you can have the best time-saving secrets, solutions, and techniques sent directly to your email inbox. Just go to:

Woodsmith.com
and click on,
"Woodsmith eTips"

You'll receive one of our favorite tips by email each and every week.

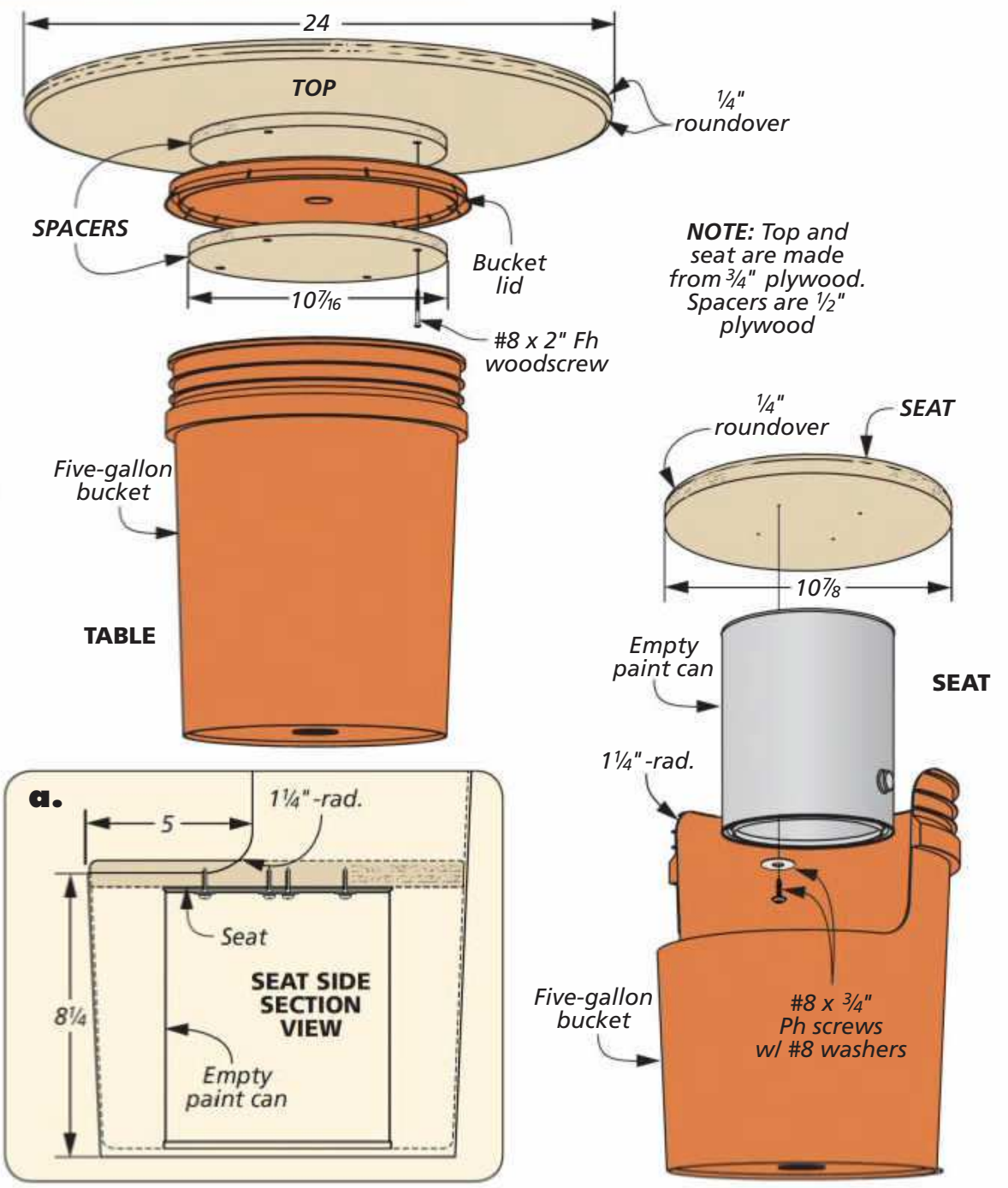

NEW Online Class!
Table Saw Basics
with James Hamilton.
To sign up, go to:
WoodsmithClasses.com

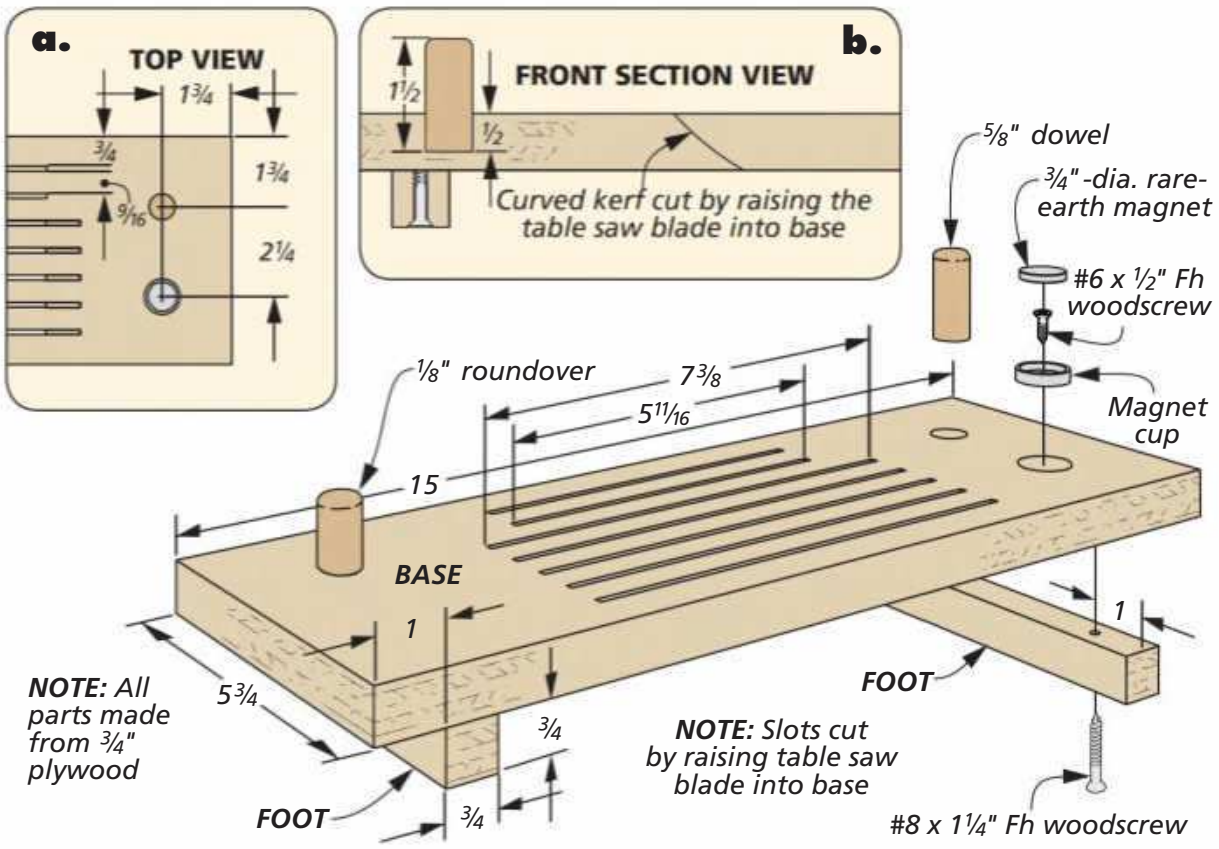

Shim & Nut Holder

In a recent *Woodsmith Tips* email, I saw a tip to use a plywood platform to hold all the parts of a dado blade when you're changing blades. The problem I had, however, was keeping track of the shims, along with the nut and flange washer from my table saw. That's when I added the modifications you see here.

A SPOT FOR EVERYTHING. The concept is similar to the original tip. However, I made the plywood base slightly wider. Then, I installed two dowels into the base. One dowel is to hold the dado shims, and the other dowel is for the flange washer from my table saw. I also added a rare-earth magnet into the base. This gives me a place to set the nut from the table saw arbor. Now, everything is right at hand when I'm changing my saw blade, and I'm no longer fishing for the shims I need or chasing a lost nut inside the saw.

Karl Reinhardt
Webster Groves, Missouri

Woodsmith SHOP

Iowa Public Television
Iptv.org
Sponsoring Station

POWERMATIC
Kreg
Old Masters
Major Program Underwriters

Titebond®
Additional Funding

all about

Exotic Wood Accents

A surefire way to increase the "Wow!" factor of a project is to use unusual woods that draw your attention. The grain pattern or a small feature like a knob or inlay can make all the difference. One easy way to do this is with a unique, exotic species of wood. While these woods can be expensive in large quantities, using a small piece as a focal point in your project means you won't have to break the bank.

I want to take a look at a few of the exotic wood species you can use. You'll often find these in small quantities at online retailers or your local woodworking store. Exotic wood species are also available as pen blanks and are perfect for making small, decorative accents.

WENGE

For predominantly light or medium-colored projects, wenge (commonly pronounced WEN-ghiy or WEN-gay), can add just the right amount of pizzazz.

Wenge is a dark brown or reddish wood with black streaks. The large, open pores are obvious on the end grain. After a surface is machined, mineral deposits in the wood can reflect the light. And once a finish is applied, the grain develops even richer and darker tones, as shown in the box lid above.

Wenge, at times, can be a challenge to work with. Its changing grain direction often tears out when working it with hand tools. Wenge can also seem "powdery" and splinters easily. And mineral deposits inside the wood dull tool edges easily.

The trick to working with wenge is sharp tools. When working with hand tools or on the lathe, taking light cuts is the key to getting good results. You may have to hone your tools often. At the table saw, a crosscut blade with a high number of teeth provides the smoothest cuts.

EBONY

When you think of ebony, you may automatically contrast it with ivory. Ebony is often thought of as being solid black. But that's not necessarily true.

There are several species of ebony. Macassar or Gabon ebony are the classic dark ebony species you're familiar with, as shown at right. Other species range from a mixture of black and white to browns with streaks of red or yellow.

Ebony can be difficult to work whether you're using power tools or hand tools. Like wenge, ebony is hard on tool edges. I find that ebony is also prone to tearout, so making sure your tools are sharp and taking it slow is the best advice I can give you.

PADAUK

Padauk (pronounced puh-DOWK) is a straight-grained wood often selected for its bright reddish-orange or pink coloring, as in the playing card case shown on the next page. As the wood ages, padauk oxidizes to darker, richer colors. This is

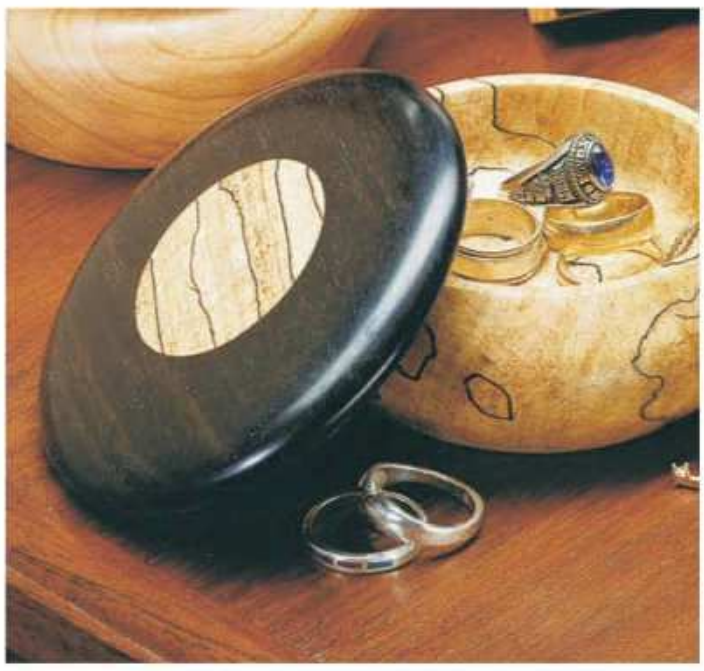

▲ Ebony's dark brown or black color makes a great accent on small projects, especially when paired with a lighter wood.

Editor: Randy Maxey

something to keep in mind as you work out the color scheme of your project.

The high density of padauk makes it ideal for turnings, moldings, and detail work. It's easy to work with hand and power tools with only a slight dulling effect on tools. It does tend to splinter when sawing, so use a fine-tooth blade and back up the cut for clean edges.

HOLLY

While not technically an exotic wood, holly is the prime choice for classic, eye-catching detail and contrast. Its consistent, white or ivory tone nicely complements darker woods. The chessboard shown in the upper right photo is a classic example. Holly is also often used for stringing and inlay work.

▲ The rich, reddish tones of padauk will mellow over time. Its straight grain makes it easy to work.

Holly has a close, irregular grain, which makes working with it a challenge. The constantly changing grain direction requires super-sharp tools and a lower cutting angle, particularly when sawing and planing. Holly is prone to chip out easily, so take your time.

On the plus side, holly is great for turning and carving. It holds details so well that engravers find holly a good medium for their craft.

BOCOTE

Pronounced boh-KO-tay, this hardwood is a member of the *Cordia* genus. If you're looking for an accent wood with a striking, contrasting grain pattern, bocote is the right choice. It's a long-time favorite of woodworkers because of its vibrant grain patterns and colors.

Bocote's claim to fame is the dark brown or black grain lines against a background of reddish-brown or tan (lower right photo). Bocote creates eye-catching appeal on smaller projects or as a focal accent on larger pieces.

In terms of how it machines and reacts to hand tools, bocote is not unlike the other accent woods I've talked about so far. It's a dense wood that benefits from sharp tools, but doesn't dull them as quickly as some of the other species.

Bocote has a relatively straight grain that makes it less prone to tearout. Detail work done with chisels and carving tools leaves crisp, clean cuts.

▲ The white or ivory color of holly is highly prized for its consistent color and brightness, particularly when paired with darker woods.

GENERAL CHARACTERISTICS

There are a few common traits among all these woods that I want to point out. First, they tend to be much denser and heavier than domestic species. So if you're using screws or nails, it's a good idea to drill pilot holes first.

Another thing worth mentioning is that some exotic woods can be oily. When applying glue, I like to wipe the surface with acetone beforehand.

Exotic woods really show off once you apply a finish. Oil and wax are my favorites for bringing out their natural beauty and stunning grain patterns.

As a final note, there are some health considerations and tips you should be aware of when working with exotic woods. You can find out more by taking a look at the box below. W

Safety First: WORKING WITH EXOTIC WOOD

Many exotic wood species can cause allergic reactions, from mild skin irritation to swelling and breathing problems. I advise wearing a dust mask and making sure your skin is covered. Gloves would be a good idea while sanding. Dust collection for your sander is a must.

If you start to itch, develop a skin rash, or have difficulty breathing, be sure to seek medical attention.

► Wearing protective gear while working with exotic woods is the best way to avoid allergic reactions.

▲ The stark contrast in the color of the grain makes bocote a great choice for adding visual appeal to your project.

Routing with Trammels

Attach your router to a board. Pin it down on one end. Making precise curves and circles is a little more complex than that, but not much.

Straight and square — these are the normal boundaries of the woodworking world. It's a standard that provides order and structure. But we all love shaking things up a bit. Throwing a curve (or a circle) into the mix is one sure way to add spice and variety to a project.

Combining a trammel with your router opens the gate to making smooth curves and circles of any size. And it does this in a safe and controlled manner at the same time.

As you know, a router is a tool that spins a cutting bit at high speed. It's important to always keep control of the tool. Using a trammel is a hybrid of the two classic ways you operate a router. It's fixed in place, like being attached to an insert when installed in a router table. But you hold it with both hands as you do in a standard operation.

ANATOMY. The anatomy of a trammel is straightforward. The photo above shows a simple shop-made version. It consists of a piece of material (long or short) that has the router attached at one end and a pin that acts as a pivot point at the opposite end. The trammel in Figure 1 below is a little more advanced. As you see, it has a longer arm and a dowel as a pivot point.

SHOP MADE. The type of trammel you choose to build depends on what type of curves or circles you need to make, and how many of them. The trammel used in the top photo on the next page is a

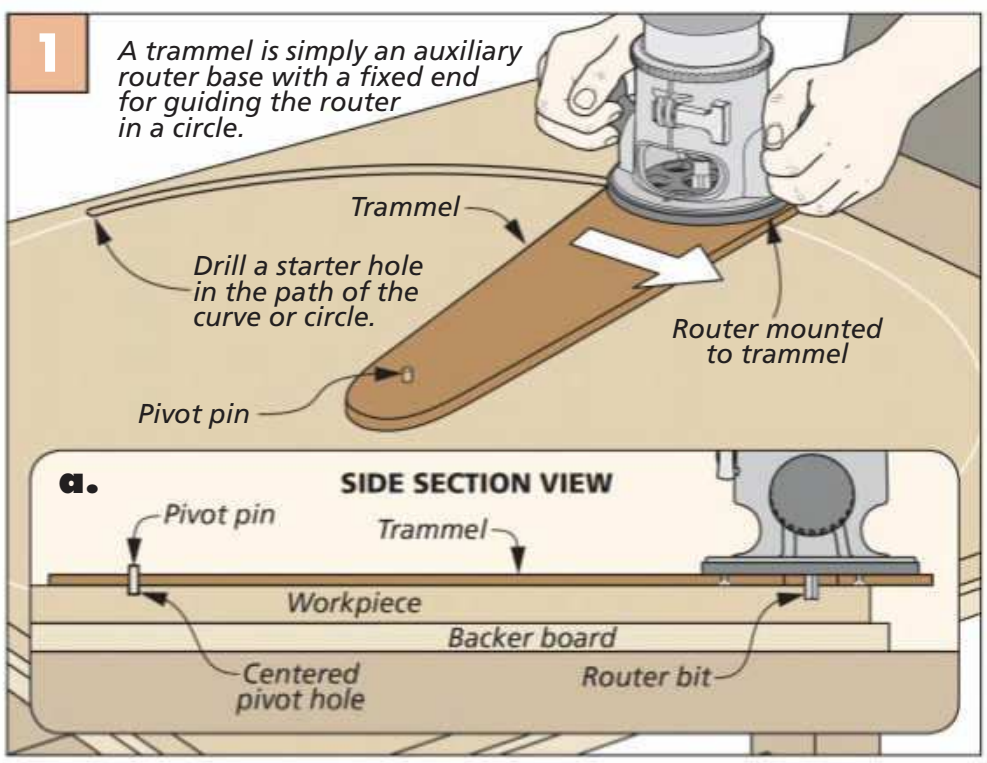

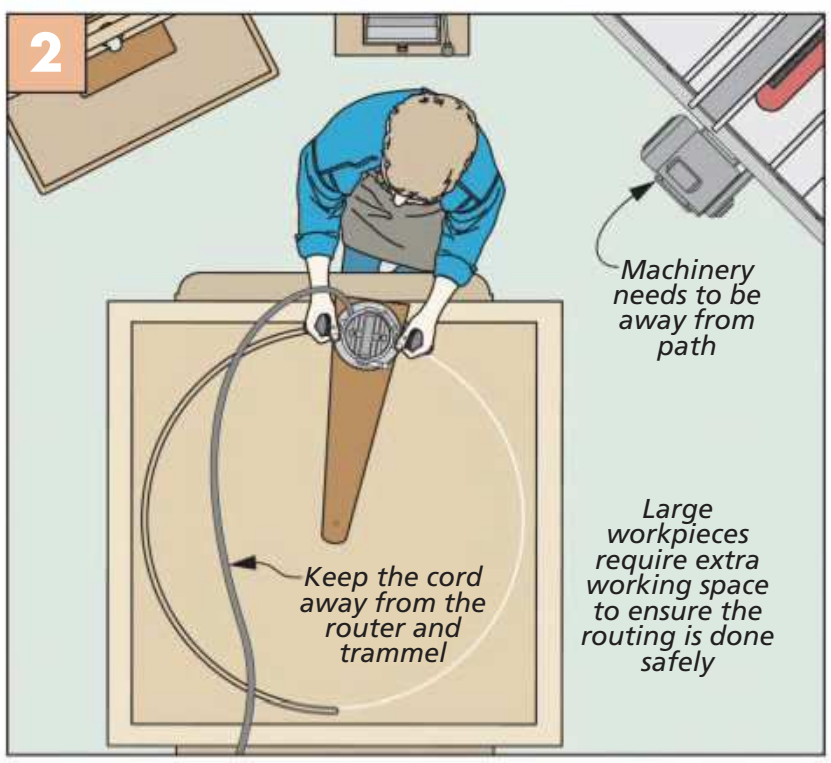

Written by: Erich Lage

step above the previous two I've talked about. As you can see, the pivot sits in a block that's taped to the surface. This removes the need for drilling a hole in the workpiece. The long slot in the arm of this trammel adds a lot of flexibility when it comes to the size of curves and circles you can make. There's more that you can do with shop-made trammels, or, you can buy one and go to work.

COMMERCIAL OPTIONS. If you don't want to make a trammel, there are plenty of commercial ones available. Circles made with one of these trammels can be as small as a drink coaster or as large as a tabletop. If you find yourself doing a lot of curves and circles, one of these trammels (shown in the box below) is worth considering.

SAFE OPERATION. The first three examples I've shown all use a router with a standard base. In that situation, you have to drill a starter hole to place the bit in (or tip a running bit into the workpiece).

The photo above shows a better, safer option — a plunge router. A plunge router lets you start your router and lower the bit into the workpiece.

While operating a trammel for small circles doesn't occupy a lot of space, ones for making larger circles potentially will. What you need to think about is setting up the shop for safety when routing workpieces the size of tabletops.

While using a trammel to execute larger operations, it's important to have the work area clear of debris and distractions. One devilish detail to consider is the cord for the router. The best thing to do is a dry run across the curve, or around the circle while making sure the cord does not trip you up, literally. Figure 2 on the previous page hits the highlights on these concerns.

LOOK OUT BELOW. If waste is going to be falling free as you are routing, be mindful of where it will drop. That's especially true for circles. Tape a backer or provide support beneath a workpiece so it doesn't get damaged when it's cut free from the blank.

Whether you build a custom trammel to suit your needs or you buy one ready to go, trammels prove that in the shop, there's always another way to cut a corner. Or in this case, a curve. W

▲ Specially designed shop-made trammels may include features like adjustable pivot blocks (that are taped to the work surface) and router mounting hardware.

Options: SHOPPING FOR TRAMMELS

There are several styles of trammels available online, from local home centers, or woodworking supply stores. Most are made from plastic, some of which are shown below and in the photo at right. These trammels come predrilled to fit various types of routers. A series of measured holes on the other side of the trammel are used as the pivot point. This lets you cut a circle to your desired diameter.

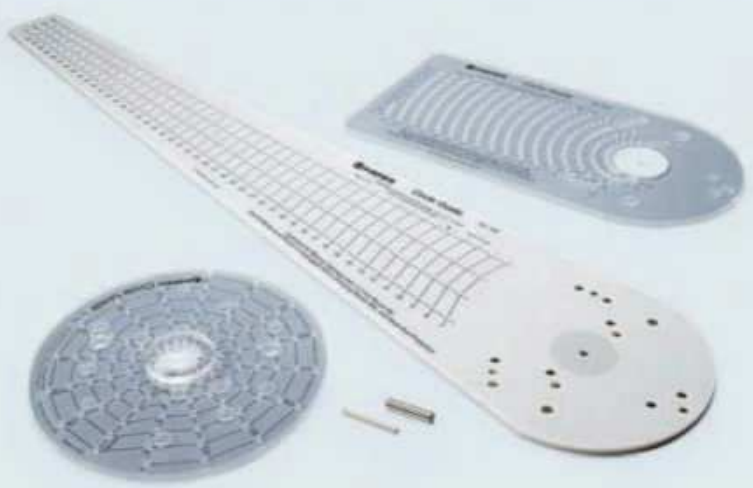

▲ Pre-made trammels (like this one from *Jasper Tools*) are readily available. They fit various routers and accurately cut multiple circle diameters or arc radius.

Illustrations: Peter Larson

Stew-Mac

Safe-T-Planer

Most woodworkers eventually get around to adding a dedicated surface planer to their arsenal of shop tools. It's typically not the first piece of equipment most of us buy, but certainly not the last, either. After all, creating workpieces of a consistent thickness is a critical benchmark for achieving quality projects. But let's face it, even a full-size planer won't address every planing job, particularly when dealing with short pieces of stock.

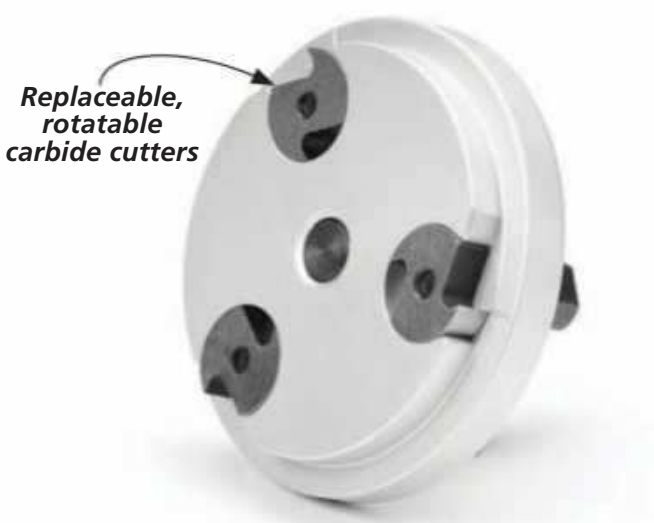

▲ The *Safe-T-Planer* consists of an aluminum-body disc with three replaceable cutters.

That's where the *Safe-T-Planer*, made by the *Stewart-MacDonald Company (StewMac)*, comes to the rescue. This simple attachment turns your drill press into a mini planer, capable of planing small parts and workpieces with beveled or faceted surfaces (more on that later). And while it certainly can't be considered a replacement for a full-size planer, it'll tackle enough tasks to justify a spot in any shop.

HISTORY. While certainly not new (the original *Safe-T-Planer* was patented in the 1950s), *StewMac* has seemingly perfected their version shown here. If you're familiar with *StewMac*, you'll know that they primarily cater to luthiers and other musical instrument makers. Their *Safe-T-Planer* was designed with these folks in mind — specifically for planing delicate parts involved with fine instrument construction. But the *Safe-T-Planer* also translates well to the modern woodworking shop.

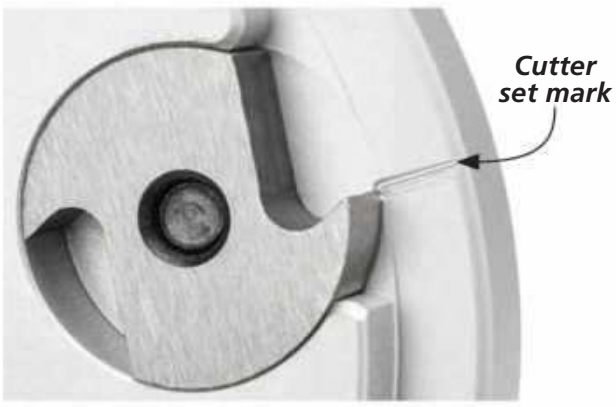

▲ When the cutters become dull, simply rotate them to the other side and line up with the index mark.

HOW IT WORKS. As you can see in the photo at left, the *Safe-T-Planer* is simply an aluminum body that mounts in

Written by: Robert Kemp

▲ Before starting work with the Safe-T-Planer, it's important to level the drill press table. A simple piece of wire with two 90° bends provides a quick method for getting this done.

▲ An auxiliary table with a smooth top allows a workpiece to slide under the cutter. A fence is used to guide a workpiece. For optimal results, set the drill press speed between 2,500 and 3,000 RPM.

a standard ½" drill press chuck. Three replaceable carbide cutters on the underside do the cutting work (lower right photo on previous page).

The cutters are recessed in the platen, as shown in the illustration at right. The cutting edge protrudes below the platen only about .005". That means the workpiece can only lift up that small amount before coming in contact with the smooth face of the platen. This virtually eliminates any possibility of the cutterhead grabbing a piece and causing a kickback situation.

The other built-in safety feature you'll notice in the same illustration is the overhang of the disc over the cutters. This prevents fingers and hands from hitting a cutting edge if they were to slip while planing a workpiece.

▲ When you need to plane a faceted surface on the same plane of a workpiece, prop one end up with a shim held in place with double-sided tape.

PREPARATION TO PLANE. To use the *Safe-T-Planer*, you'll first need to make sure that the drill press table is level. One of the quickest methods to do this is simply to bend a piece of wire and tighten it in the chuck, as shown in the upper left photo. Then turn the chuck by hand to ensure the wire touches the table at all points. If any gaps are evident, adjust the table axis accordingly. This setup procedure is important for achieving a consistent thickness when planing.

ACCESSORIES FOR USE. While it's possible to use the standard drill press table in conjunction with the *Safe-T-Planer*, a larger, auxiliary worksurface is beneficial (upper right photo). I would recommend adding a laminate top, as well. This allows the workpiece to slide with little resistance.

This auxiliary table also provides an adequate surface for clamping a fence. The fence guides the workpiece and is nothing more than a straightedged piece of hardwood.

When planing stock that is thinner than the fence, you'll want to cut an opening in the fence's edge, as shown in the main photo on the previous page. This provides the necessary clearance for the *Safe-T-Planer* to drop below the fence. And as you can see, it can even be used to make small rabbets on workpieces.

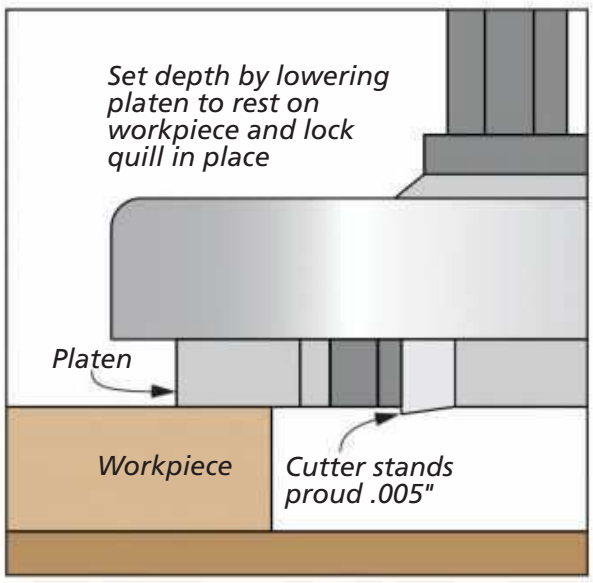

WHEN TO USE. As I mentioned before, the *Safe-T-Planer* is perfect for short pieces that are too small to run through a standard planer (usually less than 10" in length). And for extra-wide pieces, you'll make one pass before flipping them end-for-end and running them through the planer again.

UNEVEN SURFACES. The *Safe-T-Planer* also excels when you need a workpiece with a tapered surface. For this, you simply use a shim under one end of the workpiece and run it through.

This method also works for a workpiece with a surface that's not coplanar, like in the photo shown at left. Here, a bevel was cut on one end at the band saw. The *Safe-T-Planer* cleans up the surface by using a spacer to raise the end parallel with the table.

The next time you're faced with having to plane small stock, keep this handy tool in mind. It just might find a home in your shop. W

Illustrations: Bob Zimmerman

Tealight Candle Centerpiece

Perfect to give as a gift or to decorate your table, this tealight candle holder goes together in just a few short hours in the shop.

Woodworkers are typically a very giving group of people. Sharing handcrafted projects with others is the ideal way to show you care. So it's no surprise that small projects, like this candle centerpiece, are so popular. It can be built in a short amount of time and makes the ideal gift for a friend or loved one.

WOOD OPTIONS. The beauty of small projects like this is that they give you the chance to use some special wood species because of the small amount of material required (main photo and left photo on the next page). And this project even lets you experiment with the orientation of the grain, as evidenced by the same two photos.

CLEVER DESIGN. This centerpiece is designed like a golden spiral, with a stair-step configuration that corkscrews up from the lowest to the highest leg. Because of its nature, there's quite a bit of pattern work involved in creating the individual pieces. But we've provided all the information you'll need in the pages ahead.

CONTRASTING MATERIAL. One final note, tealight candles are typically made with a plastic or metal cup. For an added decorative element, we placed individual copper test caps (available in the plumbing department at most home centers) in the center of each top piece. These help to contain the wax, as well as add beauty to the project.

Written by: Robert Kemp; Project Design: Dennis Volz

Construction Overview / *OVERALL DIMENSIONS: 11"W x 2¾"H x 12¾"D*

Woodsmith GO ONLINE EXTRAS

To print a full-size pattern of the top and legs, go to Woodsmith.com

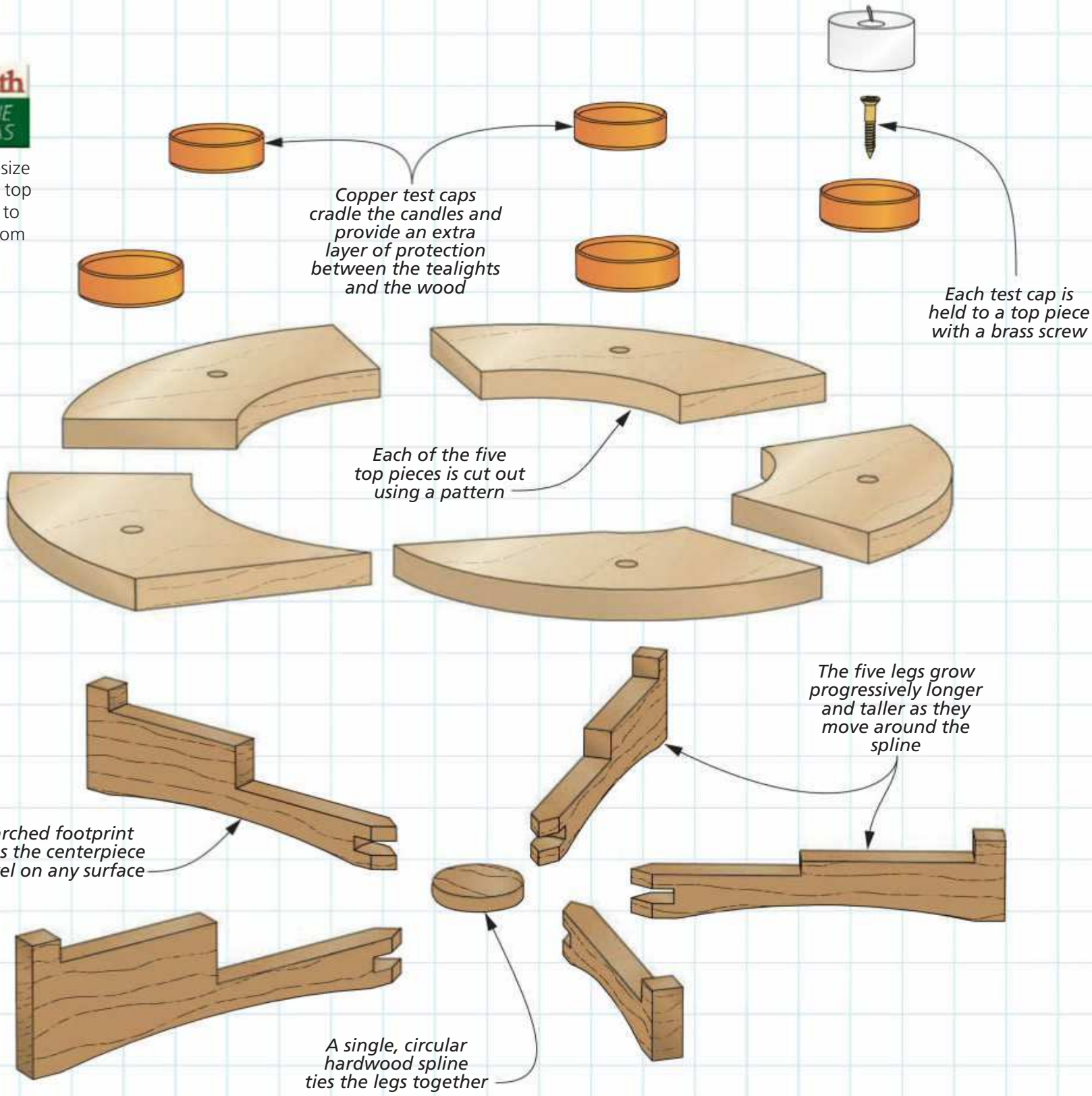

▲ The unique stair-step design of the candle centerpiece will look at home in multiple settings. This cherry and birds-eye maple version (same as the main photo) is the perfect holiday decoration.

◄ This version allows you to experiment with different wood species and grain configurations. Here, we used walnut for the base and zebrawood for the top, with the grain running inward.

Illustrations: Becky Kralicek

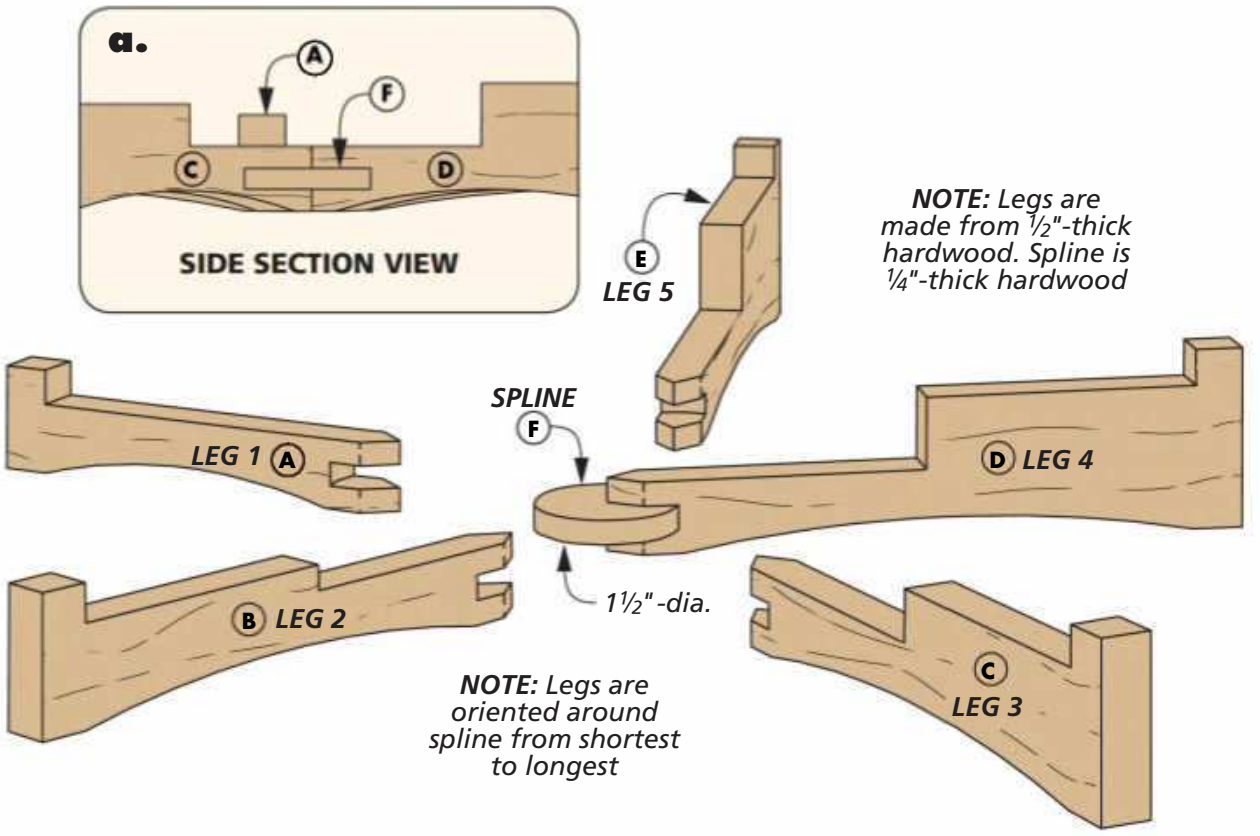

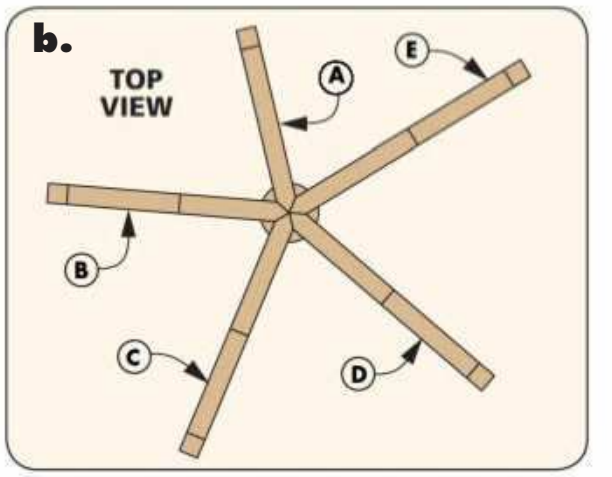

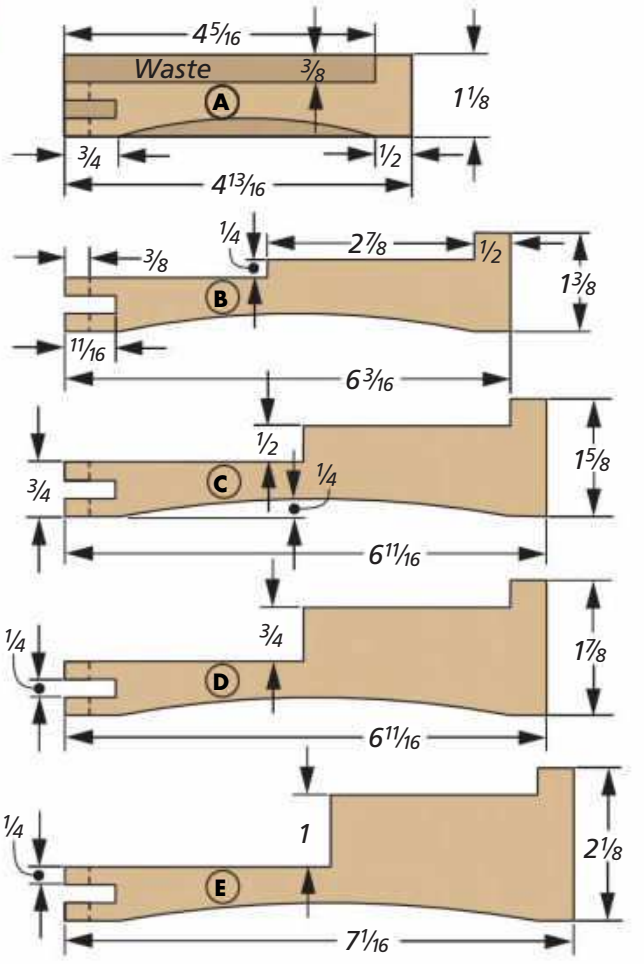

Make the **BASE**

Woodsmith GO ONLINE EXTRAS — Full-size plans for the legs are available at Woodsmith.com

The natural place to start on the centerpiece is with the five-legged base. The base consists of six parts — five legs and one round hardwood spline that acts as a hub to tie the legs together. The drawings above give you a good idea of how these parts work in conjunction.

You'll also notice from the photos on the previous page that there aren't a lot of parts required to make one candle centerpiece — 11 total. However, each individual piece has its own unique shape. From the five stair-stepped legs to the spiraling top pieces, no two parts are identical. But don't worry about having to change machine setups from part to part. There are certain similarities that make cutting things to shape a quick process.

A STEADY BASE. If you're using hardwood stock that you already have on hand, the first thing you'll need to do is plane enough material to thickness for the leg blanks. I then used the dimensions at right to cut the five rectangular blanks to size. At this point, I also took the time to label each piece and lay out the shape on each one. This helps to keep the pieces oriented correctly as you progress through the shaping process.

SPLINE NOTCH. The first cut to tackle on the legs is the notch in the end that slips over the spline. The notch in each leg is positioned the same distance from the bottom edge. Figure 1 in the How-To

How-To: START SHAPING THE LEGS

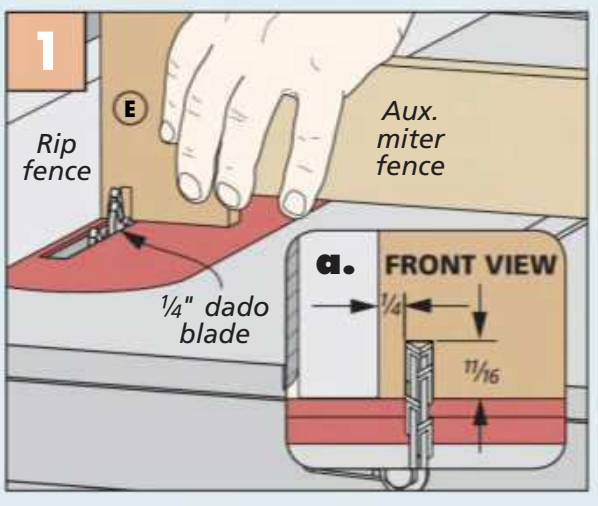

Spline Notch. Using the rip fence as a guide, cut the notch in the end of each leg blank to house the spline.

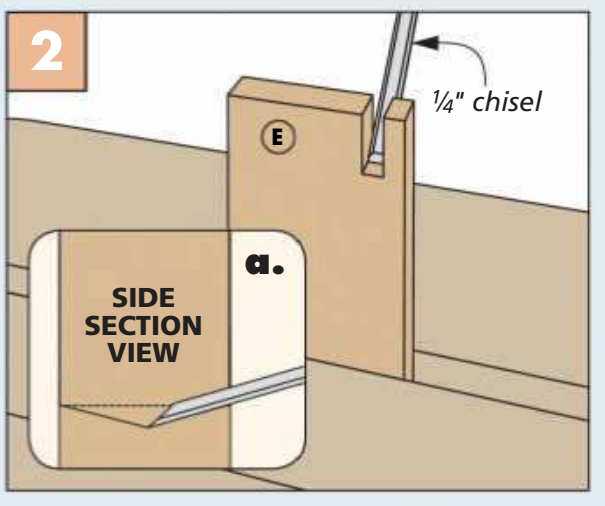

Back Bevel. To eliminate any gaps around the spline, use a chisel to undercut the notch slightly (detail 'a').

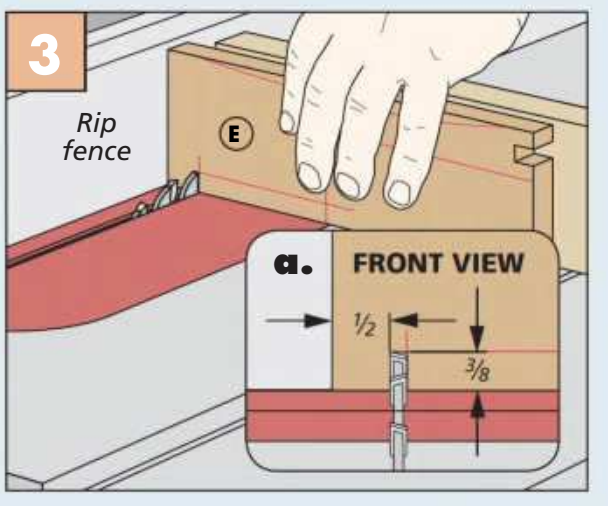

First Shoulder. Again using the rip fence as a guide, make the first shoulder cut on the top of each leg.

box on the previous page shows the simple setup for making these notches at the table saw.

Since these legs eventually fit over a round spline, it's necessary to undercut the bottom of each notch with a chisel to avoid having a gap between the leg and spline. Figure 2 shows what I mean.

Next, I made the shoulder cut in each blank on the opposite end from the notch (Figure 3). Just one setup is needed to make this cut in each leg, since they're all the same depth.

CENTER SHOULDER CUTS. The next shoulder cut in the center of the blanks is slightly different. Here, the depth of the cut gets progressively deeper from one leg to the next. And you'll notice that the smallest leg doesn't require this shoulder cut at all. Figure 1 at right shows the fence position for making these cuts in the other four legs at the table saw. Again, having the layout lines marked on the workpieces goes a long way to keep things organized.

FINAL SHAPING. Now, move to the band saw to complete cutting the legs to shape. First, I made the long cuts that meet the shoulder cuts to complete the stair-steps. You could use a fence to guide the workpiece, or make the cuts freehand like I did (Figure 2). I then turned the pieces to cut the simple arch on the bottom of each leg, as shown in Figure 3.

POINTED TOE. One more step is needed to complete the legs. And that is making a miter cut on the toe so that the five points come together gap-free (detail 'b' on the previous page). While you could make this cut at the table saw using a miter gauge, I made the simple sled shown in Figure 4 to ensure my cuts were consistent.

MAKE SPLINE & ASSEMBLE. The last piece to make before the base can be assembled is the spline. This can be cut to shape at the band saw and sanded smooth. However, I opted to use a hole saw with the pilot bit removed to get the job done quickly (Figure 5).

After checking the fit of the legs to the spline, add some glue and lightly clamp the assembly together. It's important to clamp it on a flat surface to ensure the base doesn't rock (Figure 6).

How-To: FINISH THE LEGS & ASSEMBLE

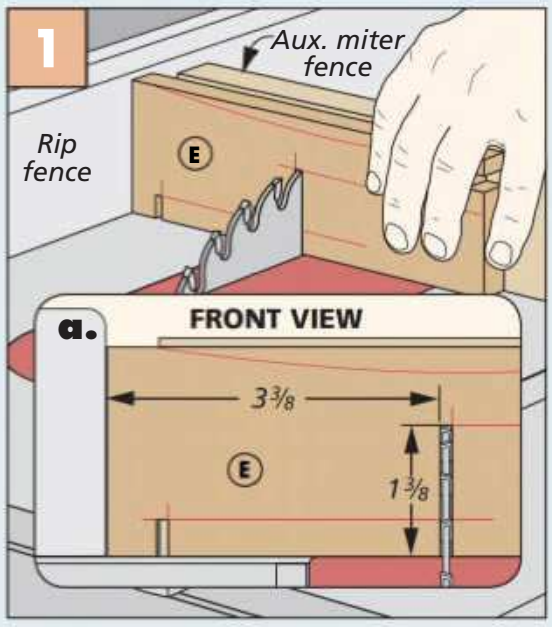

Second Shoulder. Adjust the rip fence to make the second shoulder cut. Lower the blade for each leg.

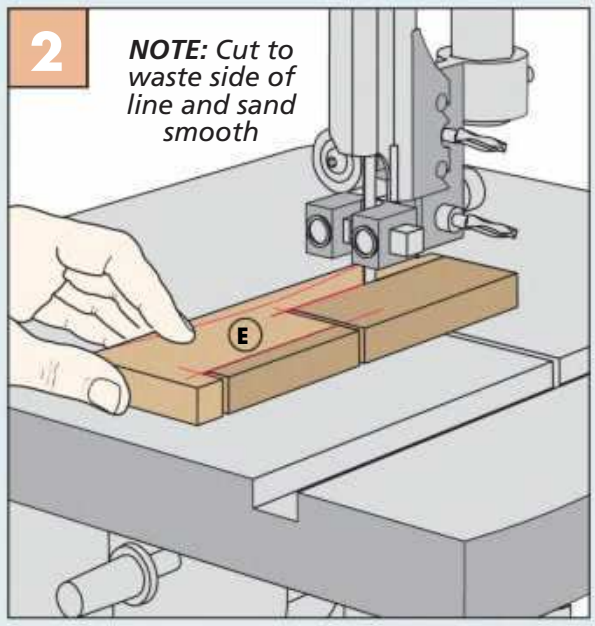

Complete the Stair-Step. Remove the rest of the waste to complete the steps at the band saw.

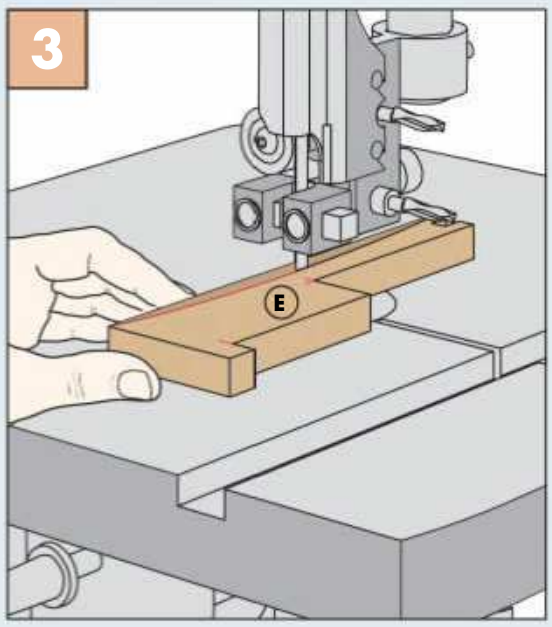

Curved Bottom. The band saw makes quick work of cutting the curve on the bottom of each leg.

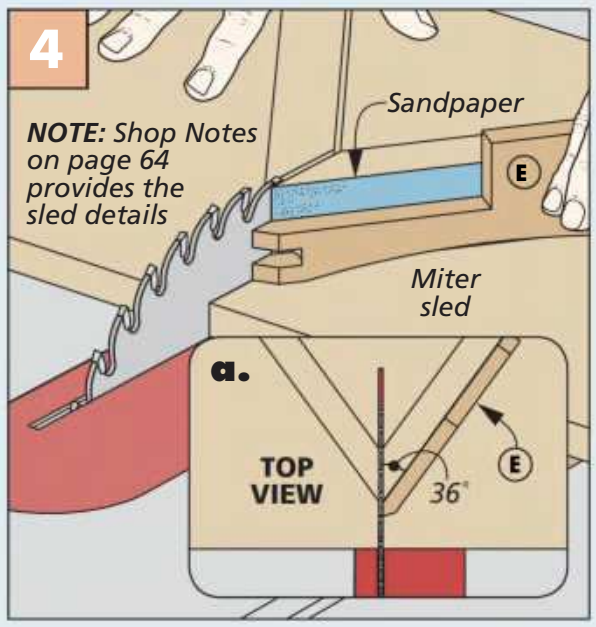

Miter Sled. For speed and accuracy, build this simple sled to cut the miters on the legs (Shop Notes on page 64).

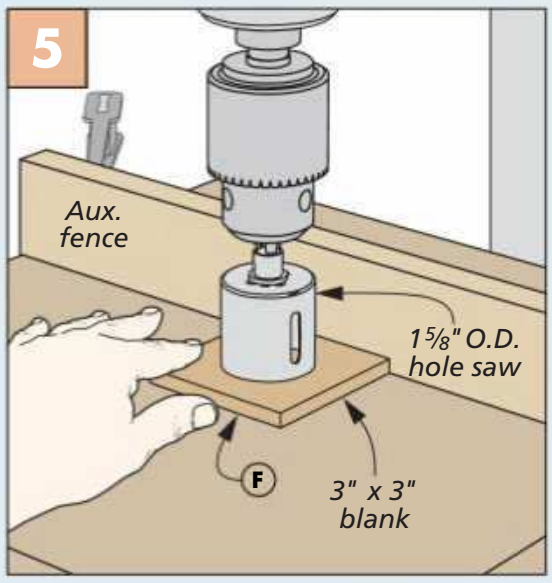

Quick Spline. A hole saw with the pilot bit removed is a fast way to create the spline.

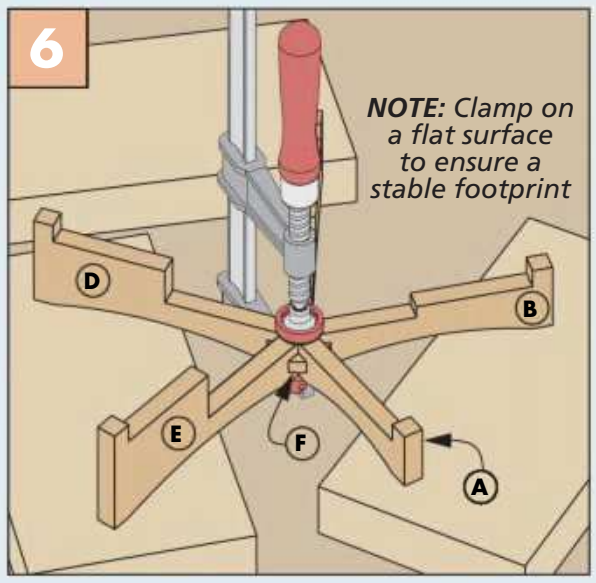

Light Pressure. Only a slight amount of clamping pressure is needed to hold the legs to the spline.

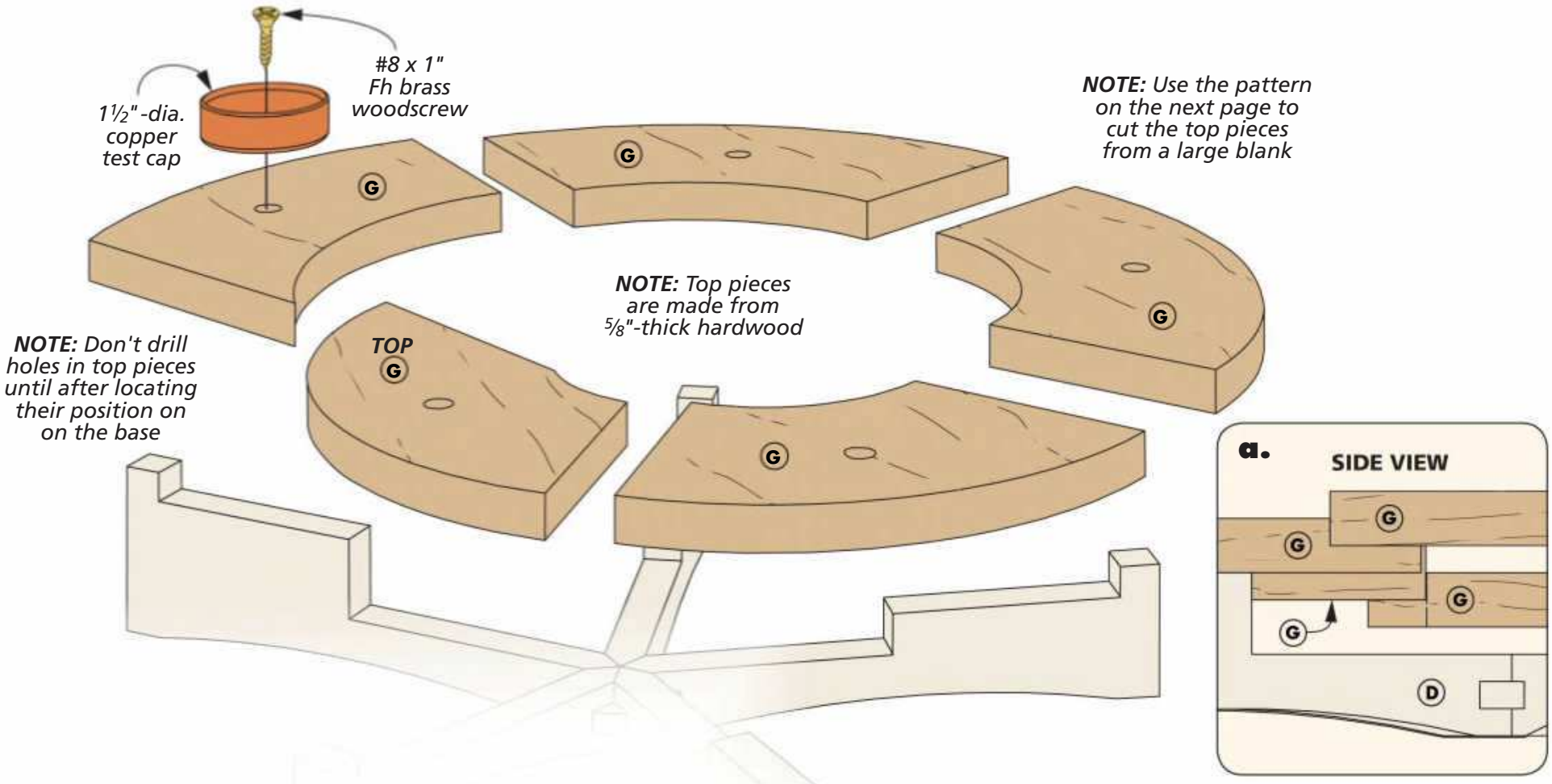

Make the SPIRAL TOP

With the base assembly completed, next you'll need to make the five top pieces that create the surface for the candles. These stand-alone pieces are individually held to one leg of the base with a screw and a little glue. (The candles cover the screws heads.) The drawings above and at the top of the next page show all the details.

TOP PATTERN. One decision you'll need to make at this point is how to lay out the pieces to get a pleasing grain pattern across the surface. For the version shown in the photo on page 16, I glued up a blank wide enough for the entire pattern shown on the next page. This results in grain that runs continuously in one direction across the top when the pieces are cut free.

Another option is to cut out each individual top pattern. You can then place each pattern piece on your stock with the grain running in a specific direction, like the version we show at the bottom of page 17. Whichever option you decide on, first you'll need to plane your stock to thickness.

CREATE THE TOP. The How-To boxes below show the process for making the first version of the top, with the grain oriented in one direction. I applied the pattern to the blank using a spray adhesive.

OUTSIDE, FIRST. I began by cutting the outside curve of the top pieces (Figure 1). You can then cut away the waste

How-To: SHAPE THE TOP

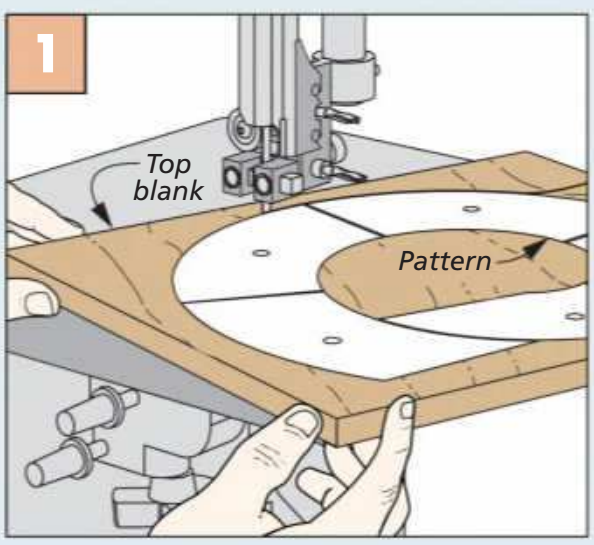

Outside Edge. With the pattern attached to the top blank, cut the outside edge to define the pieces.

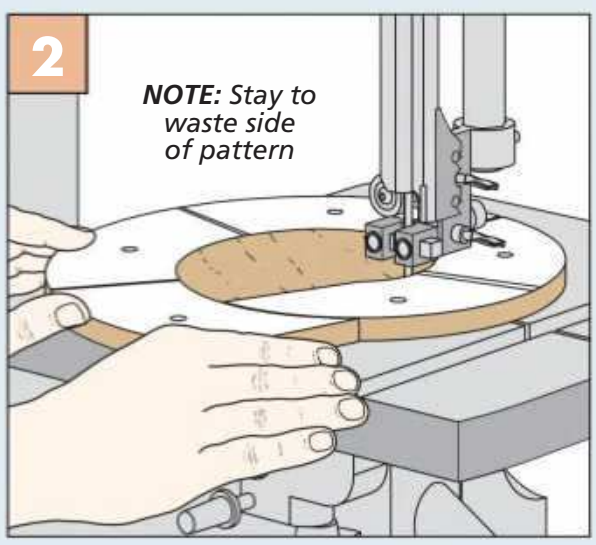

Move In. Move to the middle to cut the inner curve. A couple of relief cuts are helpful to complete this process.

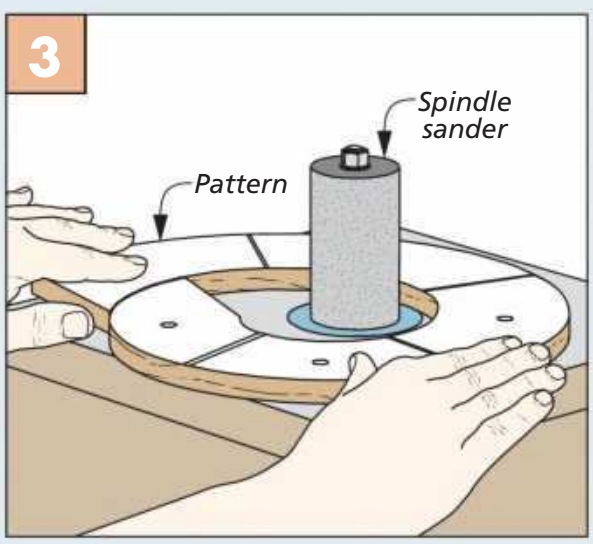

Sand Smooth. It's much easier to sand the entire assembly before cutting the individual top pieces free.

in the center of the pattern, as shown in Figure 2 on the previous page. Leave the pieces connected for now. That makes it much easier to sand the edges smooth and maintain the uniform curve (Figure 3). I used a spindle sander for the inside curve, but a sanding drum in the drill press would work, as well.

Finally, head back to the band saw to cut each piece free. A light touch at the disc sander cleans up the cut marks. I also left the pattern on the pieces for now. These give a general reference for laying out the mounting holes.

FINAL ASSEMBLY. Completing the candle centerpiece is simply a matter of attaching the tops to the legs. However, because of the free-flowing nature of this project, positioning the pieces on the legs requires a little bit of "eye-balling" to get them in the correct spot.

I began by placing the "lowest" piece on the shortest leg. As you can see in the drawing at right, this is the only piece that sits on two legs. From here, I added the rest of the pieces one at a time. The goal is to maintain the consistent curve all the way around. There's a little bit of wiggle room built into the legs to make small adjustments.

When you're happy with the placement, mark and drill the mounting holes. The copper test caps that I mentioned earlier are held in place with the same screw that mounts the top to the leg. All that's left is to choose a finish and add the candles. W

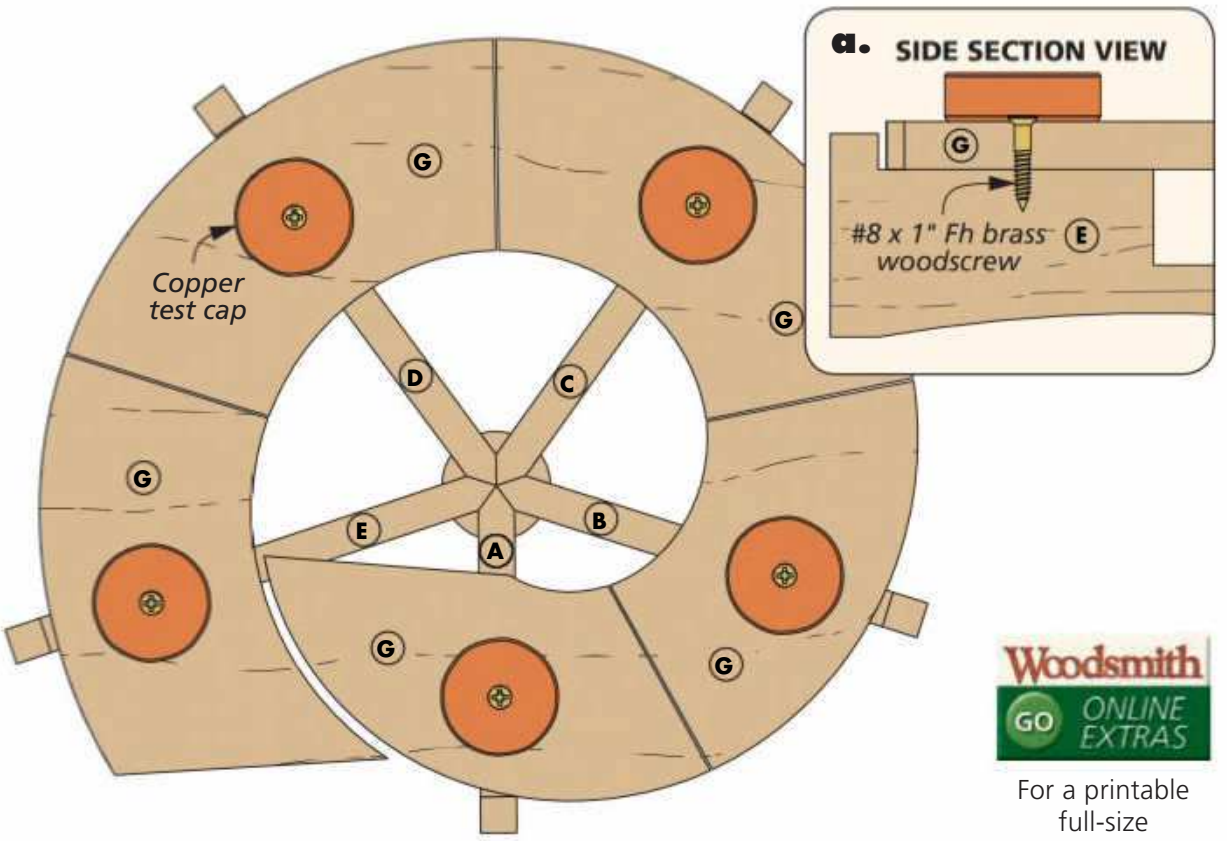

Woodsmith GO ONLINE EXTRAS

For a printable full-size pattern of the top, go to Woodsmith.com

PATTERN *(One square = 1")*

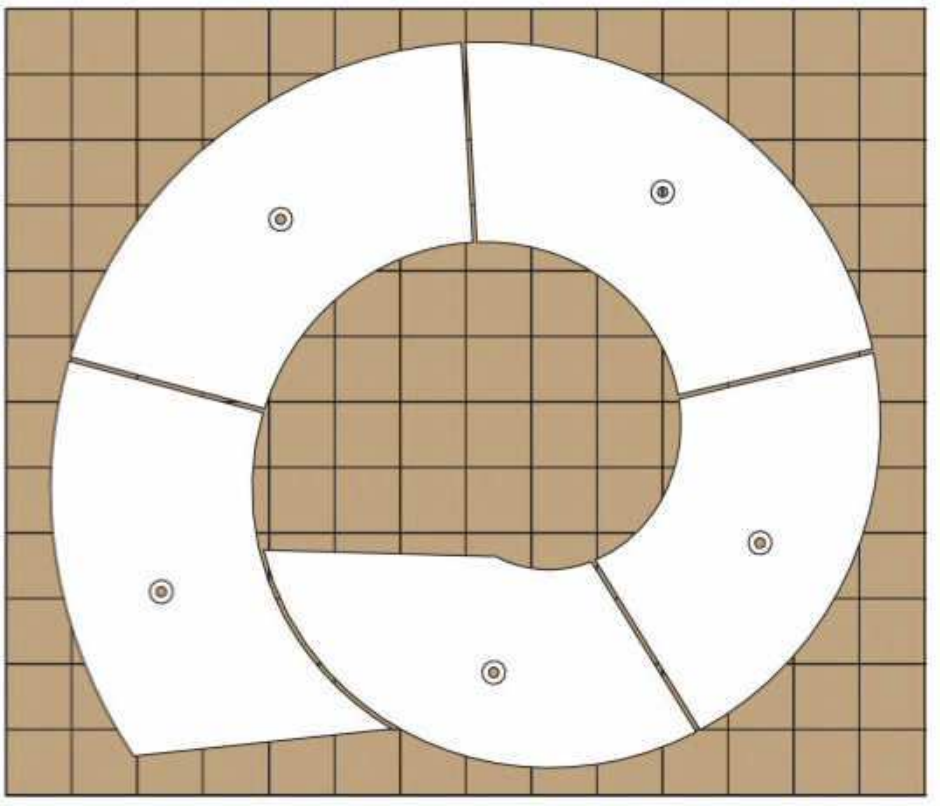

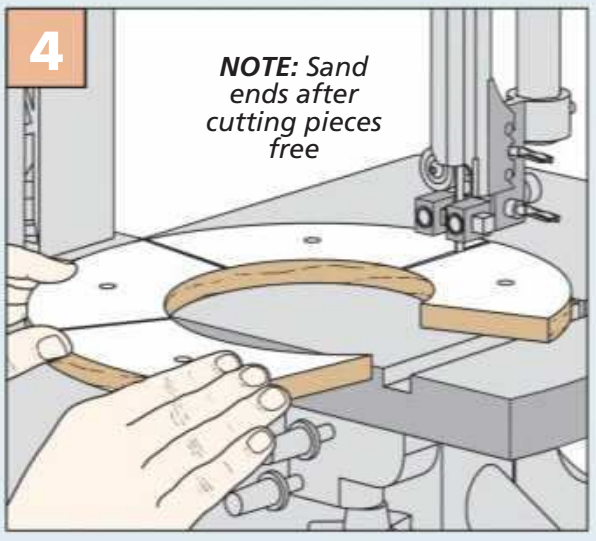

Complete the Top. Cut the top pieces apart at the band saw. A trip to the disc sander cleans up the ends.

Materials, Supplies & Cutting Diagram

A	Leg 1 (1)	½ x 1⅛ - 4 13/16	**F**	Spline Blank (1)	¼ x 3 - 3
B	Leg 2 (1)	½ x 1⅜ - 6 3/16	**G**	Top Blank (1)	⅝ x 14 -12
C	Leg 3 (1)	½ x 1⅝ - 6 11/16	•	(5) #8 x 1" Fh Brass Woodscrews	
D	Leg 4 (1)	½ x 1⅞ - 6 11/16	•	(5) 1½"-dia. Copper Test Caps	
E	Leg 5 (1)	½ x 2⅛ - 7 1/16	•	(5) Tealight Candles	

½" x 3½" - 36" Cherry (.9 Sq. Ft.)

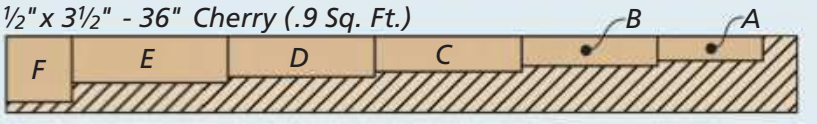

¾" x 5" - 48" Birdseye Maple (1.7 Bd. Ft.)

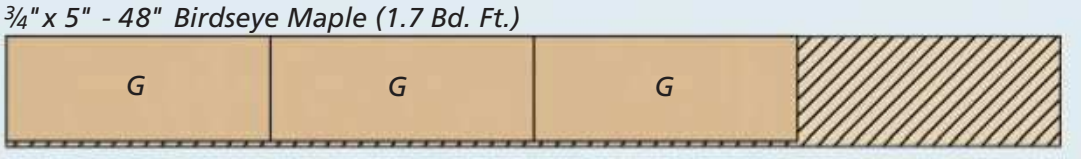

Shop Project

Multi-function Hobby Station

Customized organization and storage make this portable hobby station a great addition for any enthusiast.

Many of us have hobbies beyond woodworking. Whether it's fly-tying, model making, or jewelry making, they all require a place to work. Providing that work area is where this hobby station wins the day.

The main feature that attracted me to this project is that it's portable. After you're done working with it, you can simply close up the drawers and trays and store it away. That doesn't mean it isn't stable, however. The wide footprint and large worksurface make this a rock-steady platform to work on.

STORAGE OPTIONS. As someone who enjoys fly fishing and tying flies, I can appreciate that the storage on this station is geared to hold all those little parts and materials that you need close at hand while you're working. The four swing-out trays have different sized recesses to hold a variety of items. The organizer along the back can be customized to hold thread or other supplies and tools.

CASEWORK

When you look at the main drawing on the next page, you'll see there's nothing too complex about the construction of the main case of the hobby station. Inside, a pair of dividers separates the interior into three cubbies that'll be filled with drawers later.

The case of the hobby station is a good place to start. You'll find all the parts are easily cut to size at the table saw.

How-To: CUT JOINERY

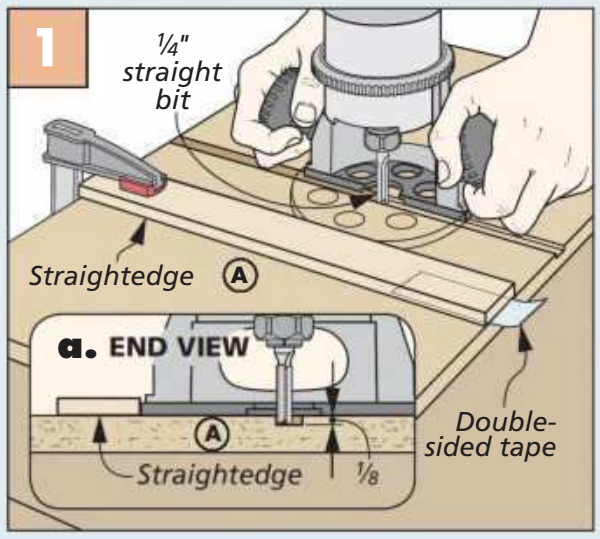

Dado First. Attach a fence to the top and bottom with double-sided tape. Cut the dado in two passes for a snug fit.

Written by: Logan Wittmer; Project Design: Dennis Volz

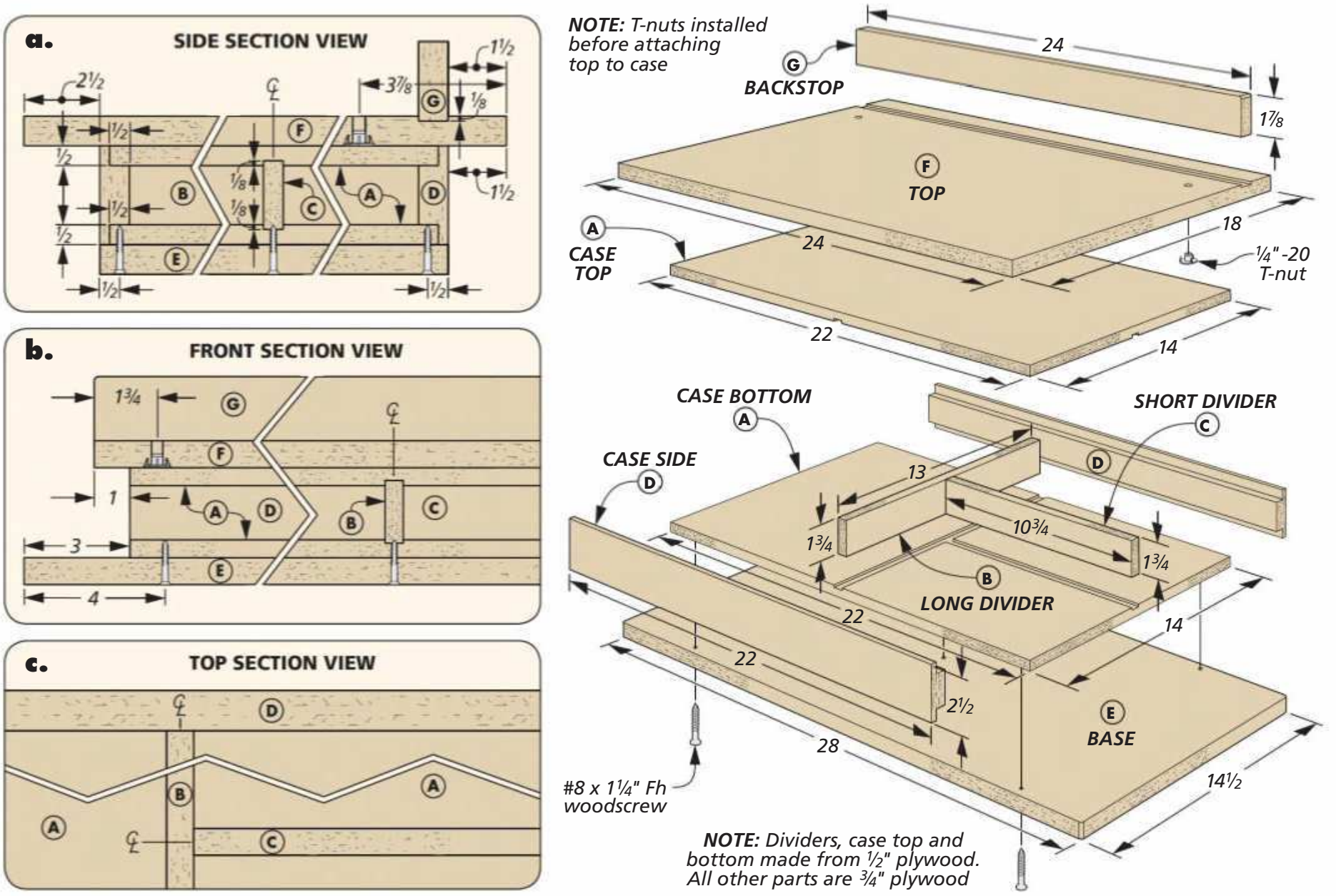

MINIMAL JOINERY. With the sized parts in hand, there are only a few joinery cuts that are needed before the case can be assembled. I started with cutting a dado and a groove in the case bottom and top. These will capture the dividers. Figures 1 and 2 below show how I accomplished these cuts with a router.

Turn your attention to the sides of the case next. Both sides have rabbets along the top and bottom edge. These rabbets hold the case top and bottom. The rabbets are easy to cut at the table saw using a dado blade and auxiliary fence, as shown in Figure 3. The case can then be glued together.

TOP & BASE. While the case was drying, I cut a groove in the top to hold the backstop. I also installed a pair of T-nuts into counterbored holes on the underside. Then, the backstop was glued in place and the base and top were attached to the case. A few screws hold the base in place while the glue dries.

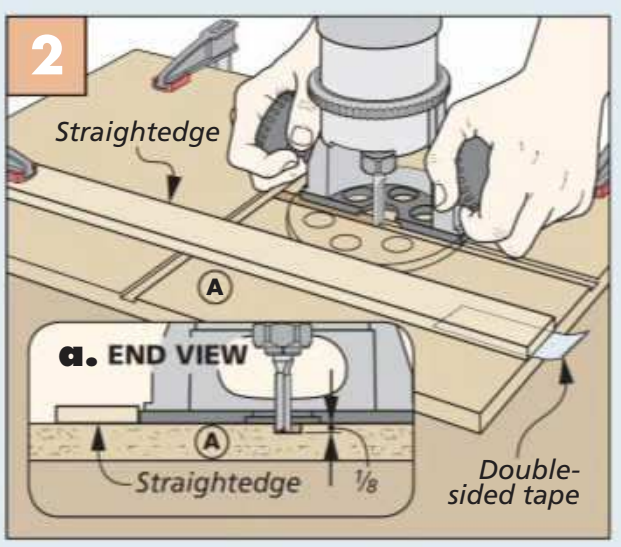

Groove Second. Reposition the fence to cut the groove in the bottom and top. Again, make the groove in two passes.

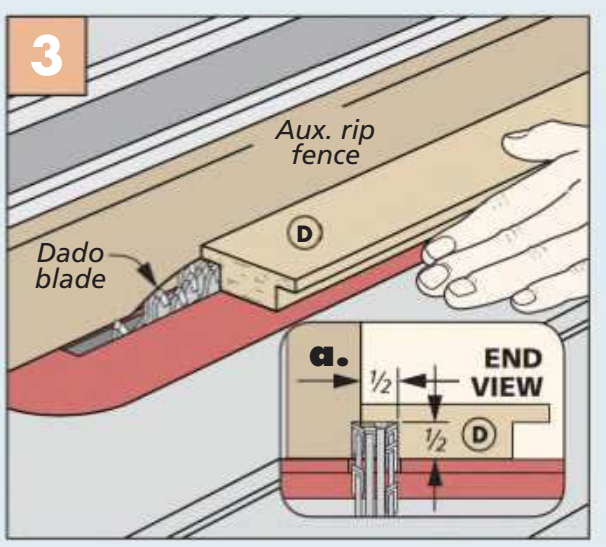

Side Rabbets. Use an auxiliary fence with a dado blade to cut rabbets along both top and bottom edges of the sides.

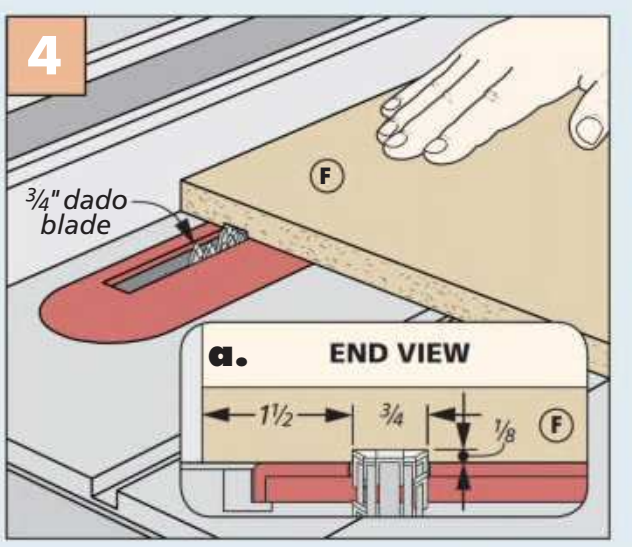

Groove for Backstop. Position the rip fence to cut a groove in the top that holds the backstop.

Illustrations: Peter J. Larson

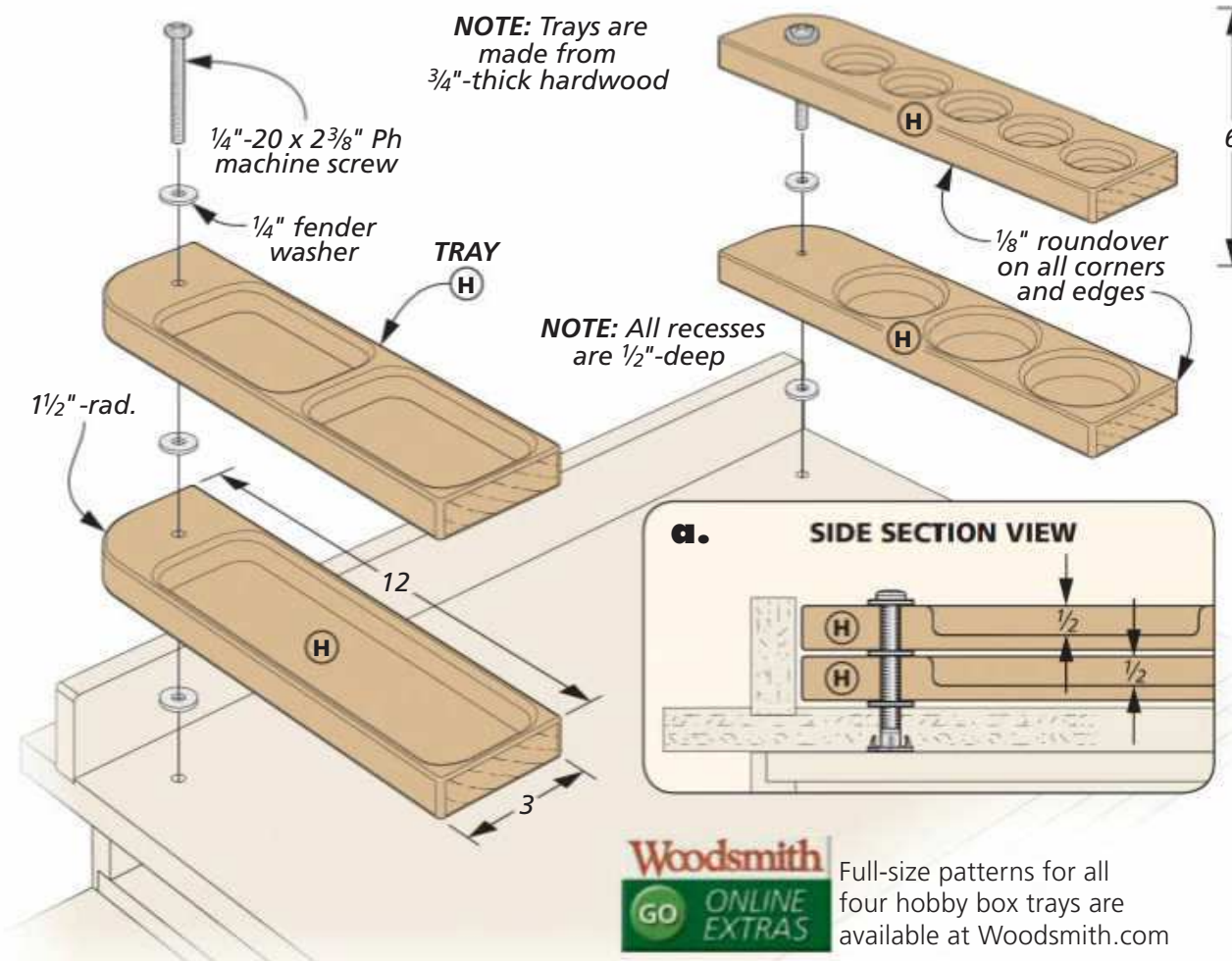

Woodsmith GO ONLINE EXTRAS Full-size patterns for all four hobby box trays are available at Woodsmith.com

TEMPLATES *(Enlarge 600%)*

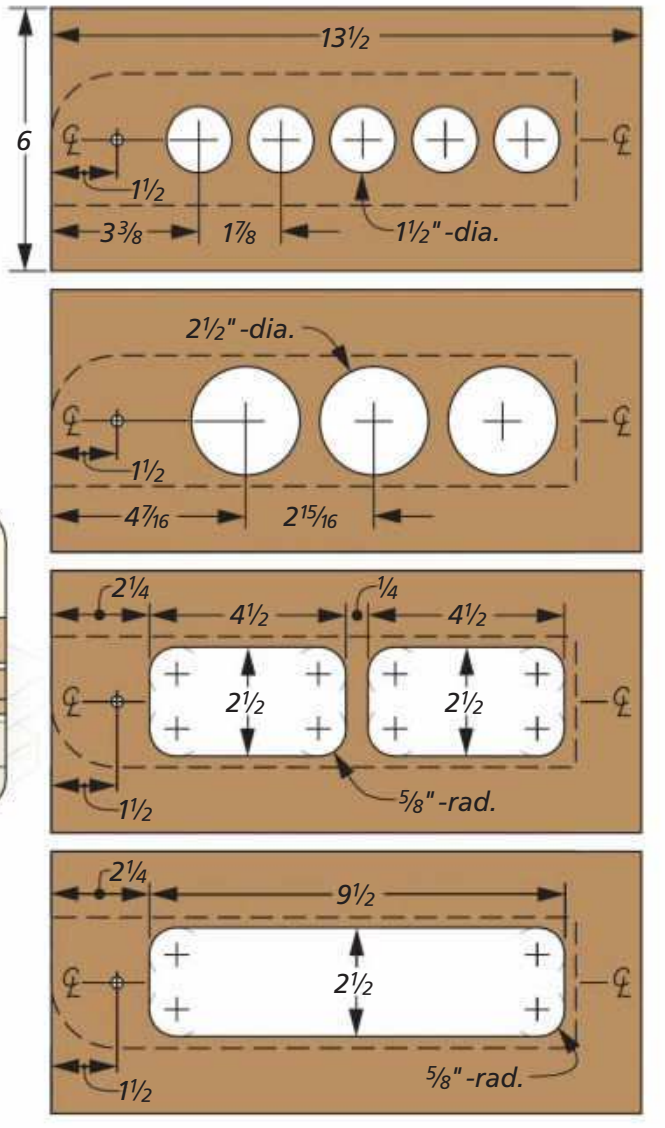

Adding the **ORGANIZERS**

After the main case is done, you can begin to add the storage and organization components of the workstation. Here, I've included a few designs for the trays and organizers that work well for general use. But customizing the organizers is as simple as adjusting the size of the openings. The first pieces you'll add are four trays that have recesses and pivot on screws.

TRAY RECESSES. The four trays start as hardwood blanks cut to size. After laying out the recesses on each tray, the majority of the waste is removed with a Forstner bit, as shown in Figure 1 below. The key here is to remove as much of the waste as you can, but to leave a little material in the bottom so the divot left by the drill bit can be removed with a router in the next step.

ROUTER TO FINISH. To finish the trays, you'll need to make hardboard templates from the patterns shown above. A router and a core box bit used with the templates brings the recesses down to the final depth and shape (Figure 2). Then, round over the top edges, as shown in Figure 3. The corner of the tray can be shaped and the edges rounded over. Finally, a hole is drilled to attach each tray to the case.

How-To: SHAPE TRAY RECESSES

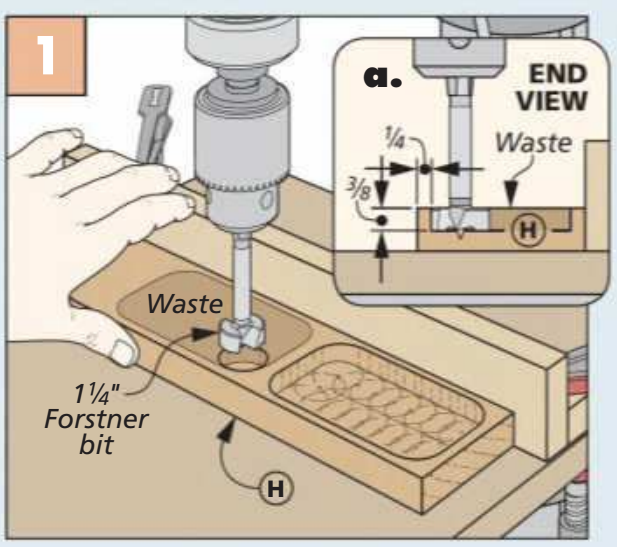

Drill Out Waste. Drill out as much of the waste as possible using a Forstner bit, making sure to leave the layout lines.

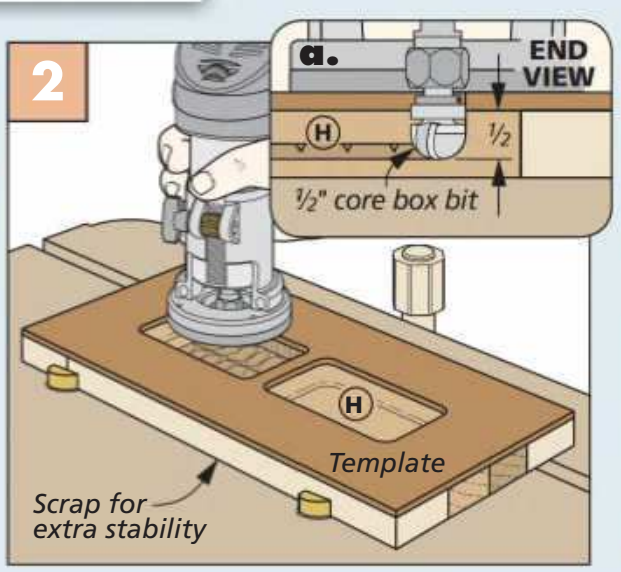

Template Work. Position the template over the tray and secure it with double-sided tape, then rout the recesses.

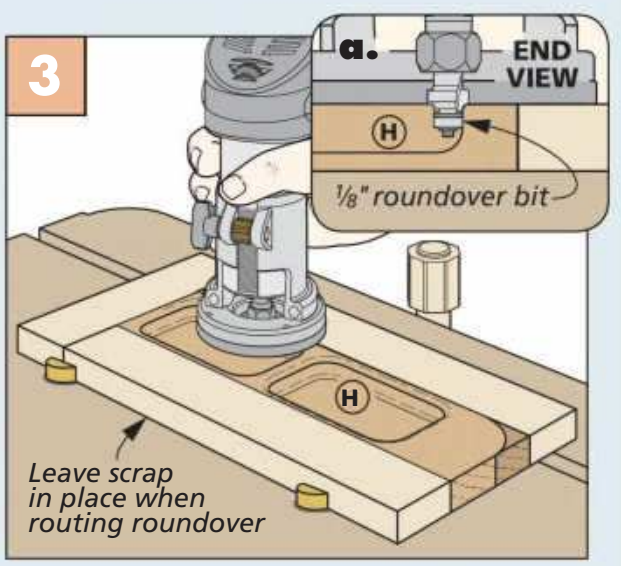

Round Over Edges. After removing the template, use a roundover bit to ease the top edge of the recesses.

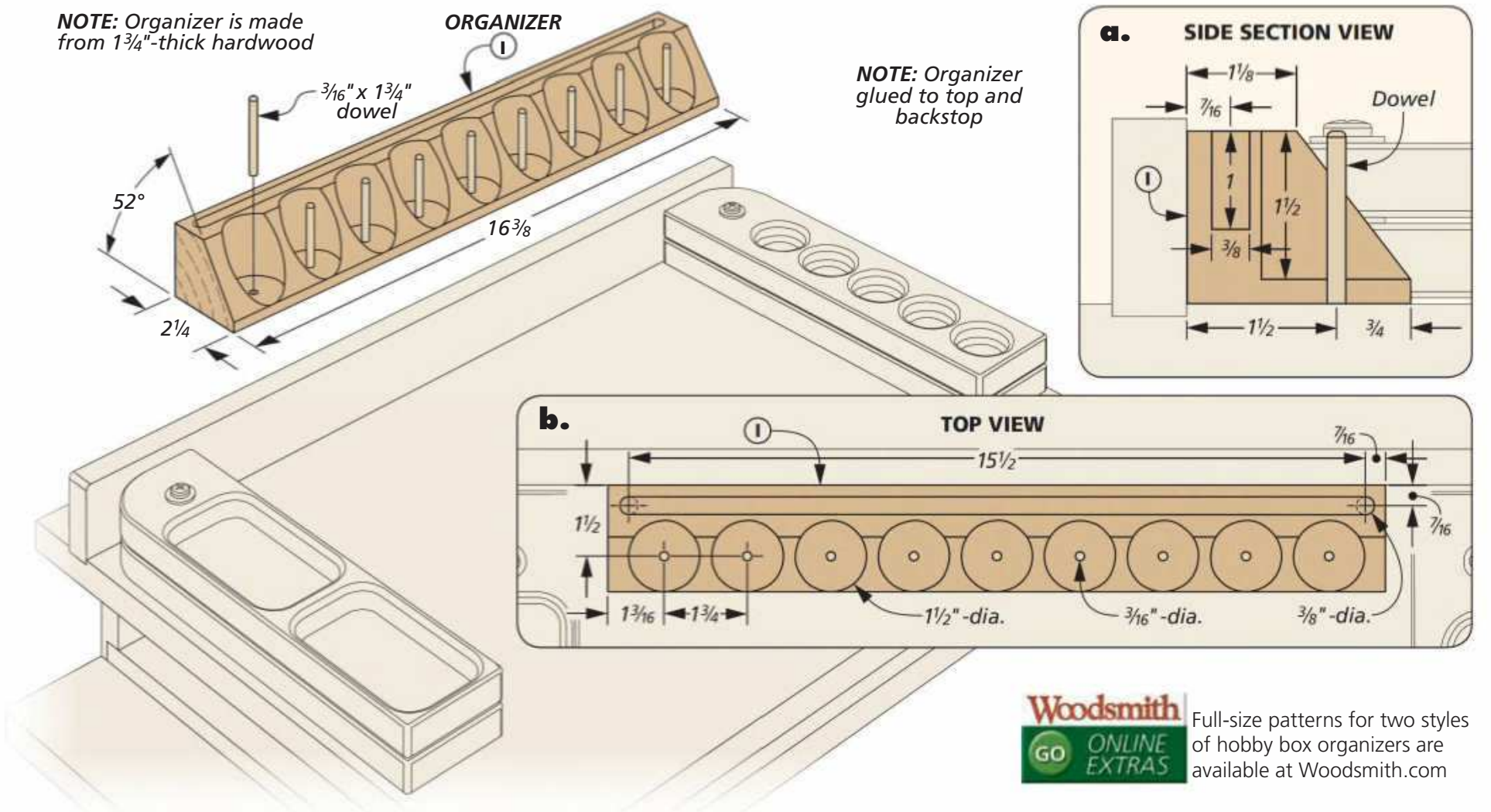

Woodsmith GO ONLINE EXTRAS Full-size patterns for two styles of hobby box organizers are available at Woodsmith.com

SPOOL HOLDER

With the swing out trays complete, you have storage for common materials you use. Now what's needed is an organizer to hold all of the tools and spools that you'll be using at your hobby station. The organizer shown here attaches to the top along the backstop and is designed to hold spools of thread. But you can customize it to suit your needs. A second style designed to hold hobby tools and paint is shown on page 27.

STARTING SQUARE. The organizer starts off as a square blank. You'll be boring a series of holes in the blank for the thread holders and also routing a slot for holding various tools. Start with routing the groove, as shown in Figure 1. Once this groove is routed, I inserted a filler block into the groove before boring any of the holes for the thread holders. This adds a little extra strength to the blank while the large holes are being drilled.

With the filler in place, drill the large holes for the thread holders (Figure 2). Then, you can use a twist bit to drill a hole through the bottom to receive a dowel. Head over to the table saw to bevel the front edge as seen in Figure 3. A strip of masking tape along the front edge reduces tearout and keeps the small corners from becoming projectiles. Finally, dowels can be glued in the through holes and the organizer can be glued in place.

How-To: CREATE THE ORGANIZER

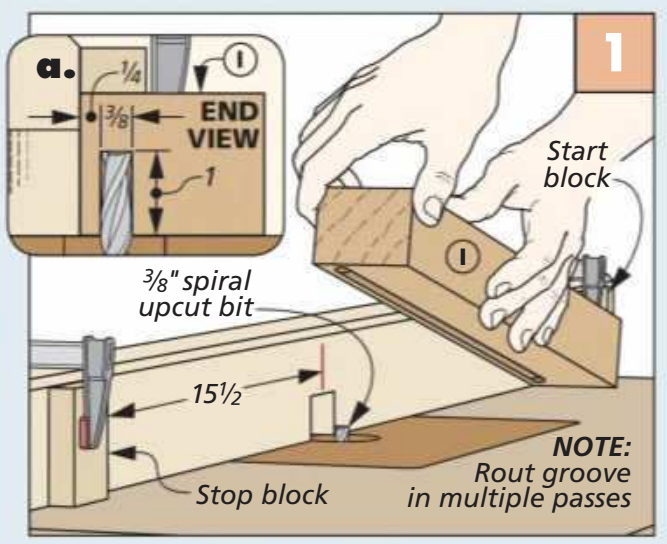

Slot for Tools. Attach "start" and "stop" blocks to the fence and lower the blank over the bit to create a stopped groove.

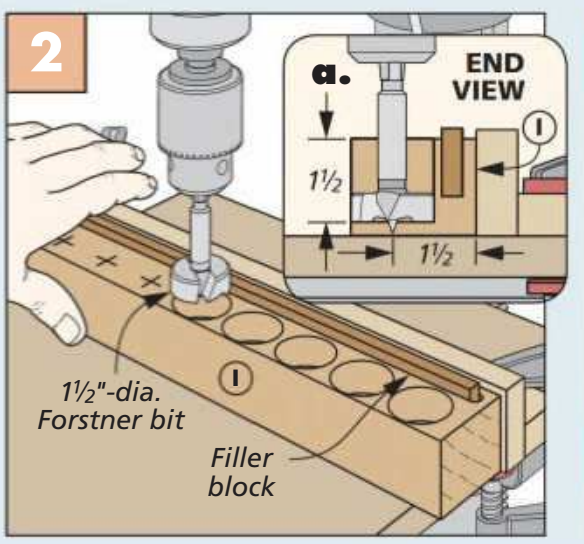

Holes for Thread Spools. Drill large, deep holes using a Forstner bit, then drill dowel holes with a 3/16" twist bit.

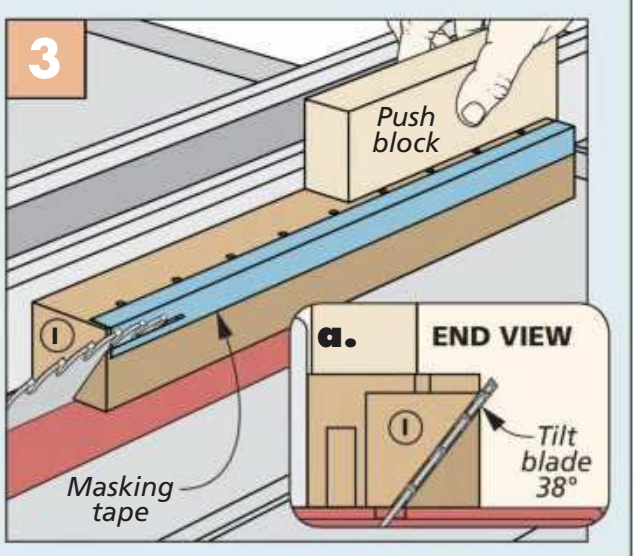

Angled Face. To prevent tearout, place a strip of tape along the waste section of the blank before cutting the bevel.

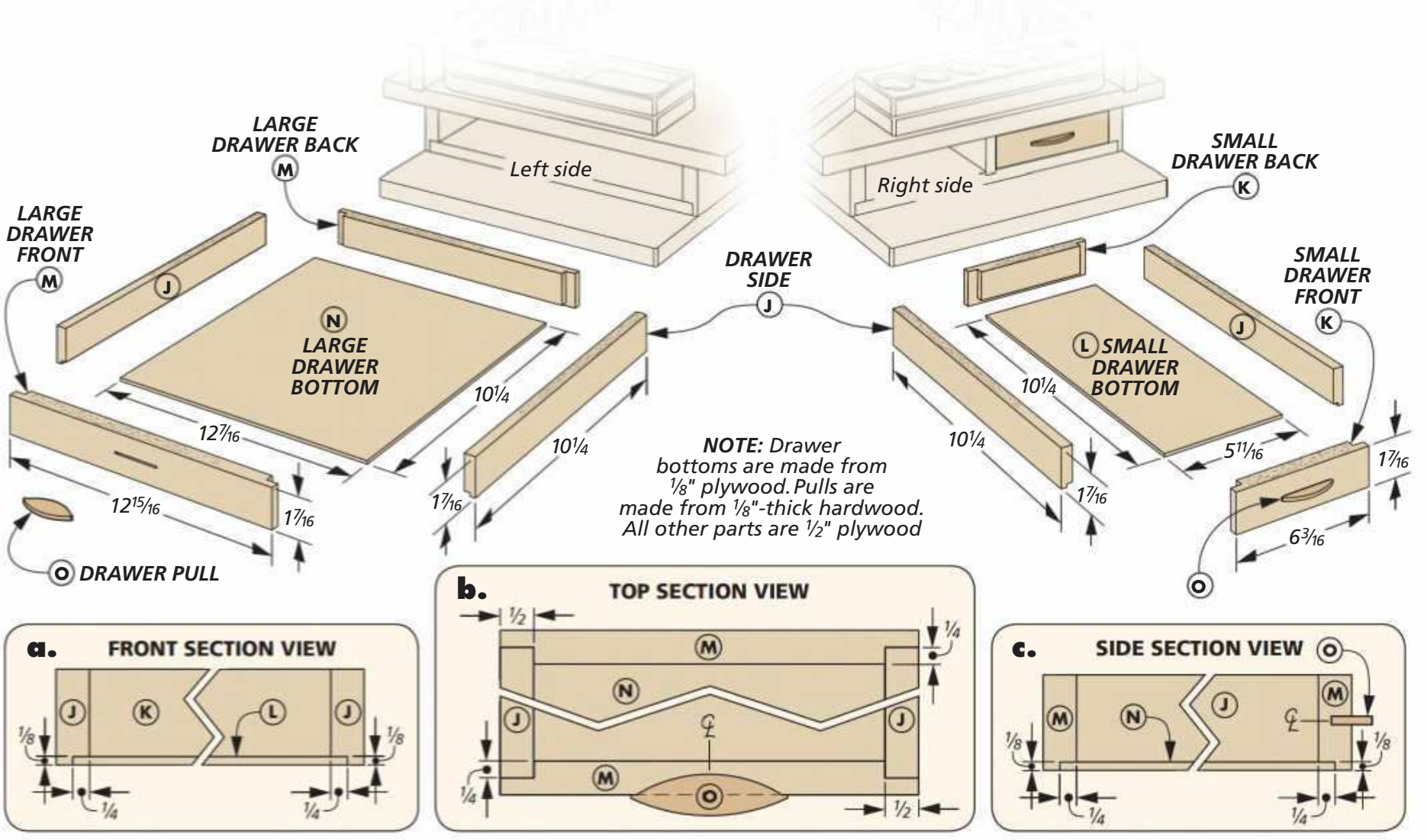

Build the DRAWERS

The final details to wrap up the hobby station are the drawers that fit inside the case. The station has two identical smaller drawers on the right side and a larger drawer on the left. All the drawers share some common dimensions however. Simple and standard joinery makes them go together quickly. As a final detail, unique shop-made pulls function great and are easy to make.

QUICK & SIMPLE DRAWERS. The drawers are all the same length and depth, which means all the drawer sides are the same. So it's just a matter of cutting the fronts and backs to size before moving on to the drawer joinery.

The drawers are assembled using rabbet joints. The rabbets are easy to cut at the table saw using a dado blade. Figure 1 in the box below shows how to make these cuts. With the rabbets cut in the fronts and backs, you can reset the fence to cut a rabbet along the bottom edge of each drawer part to house the bottom, as shown in Figure 2. The drawer bottoms can then be cut to size and the drawers assembled with glue.

NOT YOUR STANDARD PULL. You'll finish the drawers out by attaching a custom drawer pull. As you can see in the

How-To: CUT THE DRAWER JOINERY

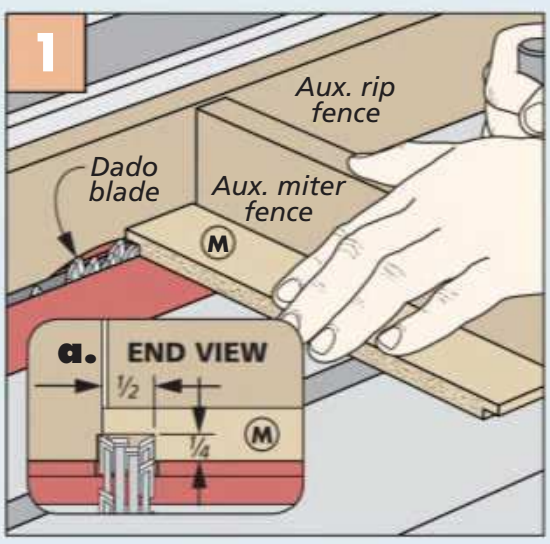

Rabbets. Bury a dado blade in an auxiliary rip fence to cut the rabbets in the ends of the fronts and backs.

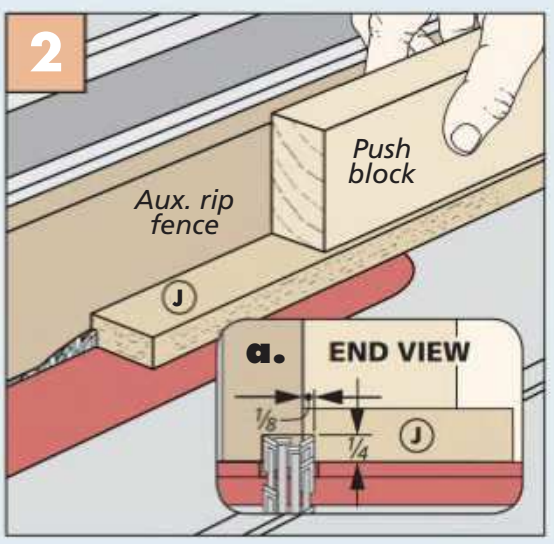

Bottom Rabbets. Reset the fence to cut a rabbet along the bottom edge of each drawer part to hold the bottom.

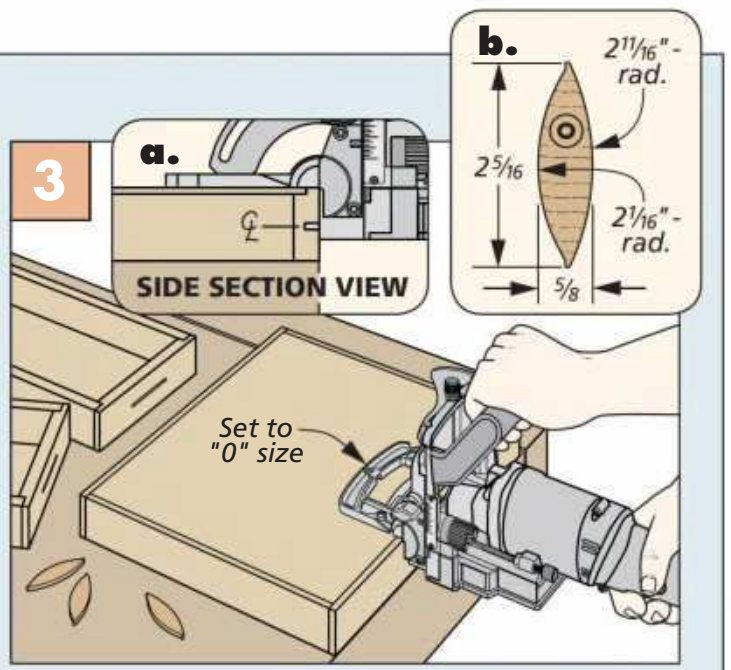

Slot for Handle. Flip the drawer over and reference the biscuit joiner off the bottom and the front to cut the pull slot.

DESIGNER'S NOTEBOOK

In this article, the organizer along the back edge is designed to hold spools of thread and a slot to hold standard tools that would be used for tying fly fishing flies.

A second option for the organizer is shown in the inset photo on page 22. This organizer is designed to hold bottles of paint and glue. It also has various sized slots and holes for different tools that are used in modeling. The number of options for the organizer are endless, so customize it to suit your needs.

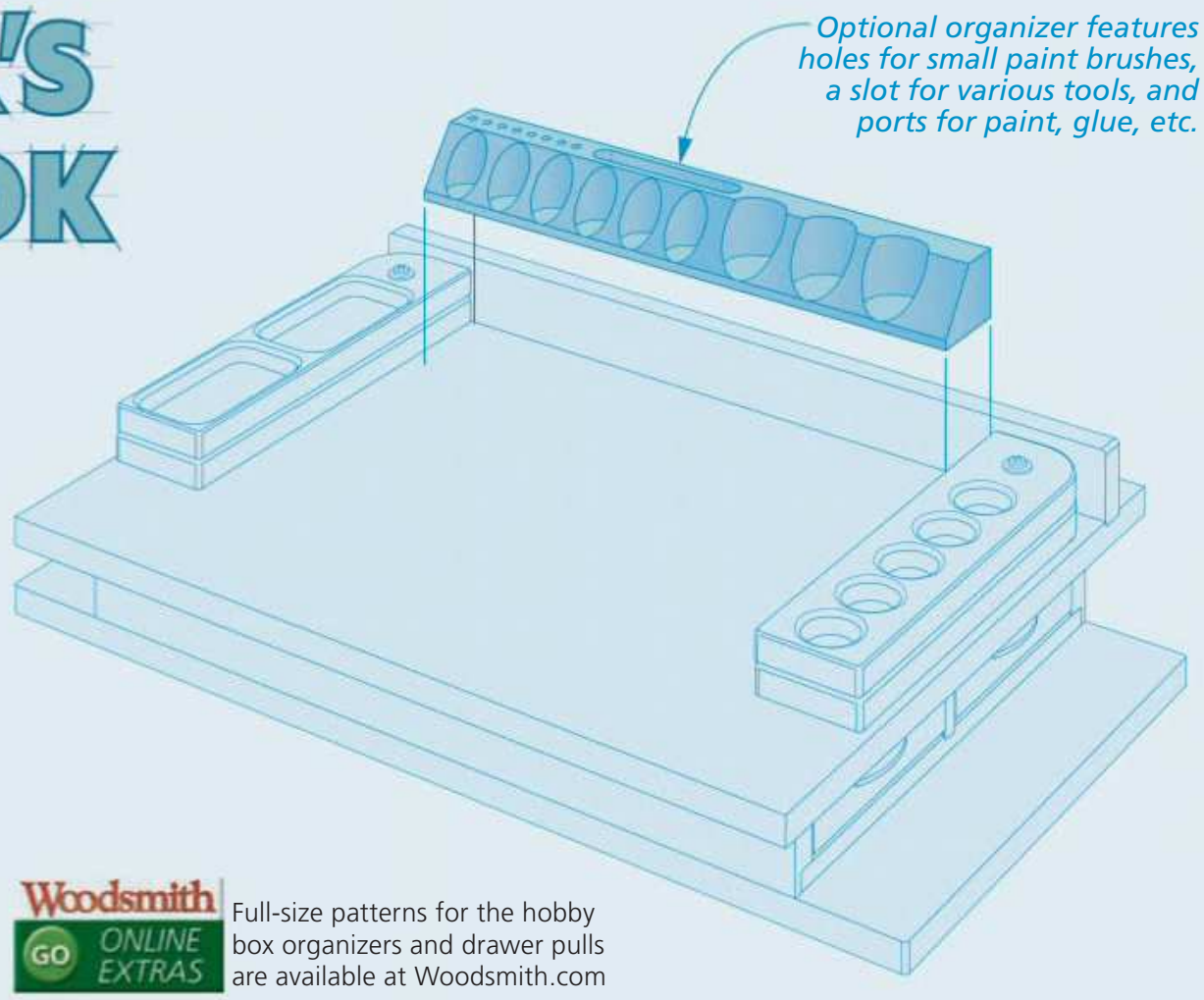

Woodsmith GO ONLINE EXTRAS Full-size patterns for the hobby box organizers and drawer pulls are available at Woodsmith.com

drawings on the previous page, these pulls are a little different from your standard knob. The drawer pulls are flat ovals cut out of a piece of hardwood. Each pull then fits into a slot cut in the drawer front.

The pull is easy to make using the template available at *Woodsmith.com*. After planing the stock to thickness, they're quick to cut out with a band saw or a scroll saw. I then gave each one a little fine tuning with a file and some sandpaper.

SLOT CUTTING. To cut the slot in the drawer fronts, I started by laying out the center line of each front. Then, it was a simple matter of cutting the slot with a biscuit joiner set at the "0" size setting, as shown in Figure 3 on the previous page. When cutting the slot, make sure to carefully line up the marks on your biscuit joiner with your layout lines on the drawer fronts. Otherwise, you'll be left with a pull that is positioned off center.

To finish the hobby station, I removed the drawers and trays from the case and applied a couple coats of spray lacquer. After reassembling the trays and the drawers, the hobby box is ready to serve as the perfect workstation for all your hobbies outside the shop. W

Materials, Supplies & Cutting Diagram

A	Case Top/Bottom (2)	1/2 ply. - 14 x 22	**H**	Trays (4)	3/4 x 3 - 12	**O**	Drawer Pulls (3)	1/8 x 2 5/16 x 5/8
B	Long Divider (1)	1/2 ply. - 1 3/4 x 13	**I**	Organizer (1)	1 3/4 x 2 1/4 - 16 3/8			
C	Short Divider (1)	1/2 ply. - 1 3/4 x 10 3/4	**J**	Drawer Sides (6)	1/2 ply. - 1 7/16 x 10 1/4	•	(5) #8 x 1 1/4" Fh Woodscrews	
D	Case Sides (2)	3/4 ply. - 2 1/2 x 22	**K**	Small Drawer Front/Back (4)	1/2 ply. - 1 7/16 x 6 3/16	•	(2) 1/4"-20 T-Nut	
E	Base (1)	3/4 ply. - 14 1/2 x 28	**L**	Small Drawer Bottoms (2)	1/8 ply. - 5 11/16 x 10 1/4	•	(2) 1/4"-20 x 2 3/8" Machine Screws	
F	Top (1)	3/4 ply. - 18 x 24	**M**	Large Drawer Front/Back (2)	1/2 ply. - 1 7/16 x 12 15/16	•	(6) 1/4" Fender Washers	
G	Backstop (1)	3/4 ply. - 1 7/8 x 24	**N**	Large Drawer Bottom (1)	1/8 ply. - 10 1/4 x 12 7/16	•	(1) 3/16" Dowel x 20" rgh.	

3/4" x 4" - 60" Hard Maple (1.7 Bd. Ft.)

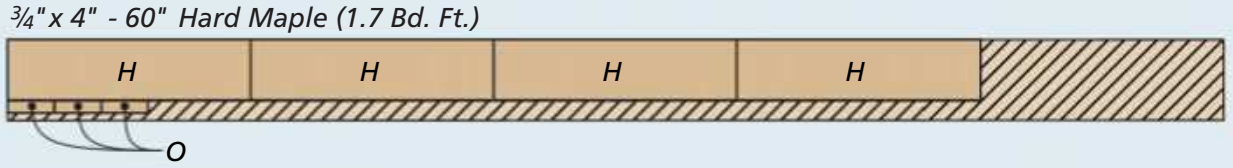

1 3/4" x 3" - 36" Hard Maple (1.5 Bd. Ft.)

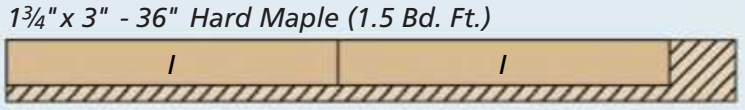

ALSO NEEDED:
One 24" x 48" Sheet of 1/8" Birch Plywood,
One 24" x 48" Sheet of 1/2" Birch Plywood,
One 48" x 48" Sheet of 3/4" Birch Plywood

Designer Project

Display Cabinet

This elegant cabinet, with its clean, strong lines, is as much a work of art as the objects that you display in it.

Displaying our family treasures has never been more of a joy since the addition of this cabinet to our living room. Its size and profile are easy on the eyes and could occupy any space in your house with quiet confidence.

The cabinet is made of a trio of hardwoods that work perfectly with each other. Four long, slender, but strong tapered cherry legs anchor the maple case. As you see here, front and center is spalted maple for the drawer fronts and doors to add another layer of interest.

UNSEEN GEMS. Starting with the drawer case, a large drawer provides some generous storage. There's also a felt-lined tray that offers a place to review and examine the items you wish to display. Inside the main case, there's a quartet of drawers that give you a pleasant range of options for hiding away family treasures. The dessert for this well-rounded woodworking meal is some custom-made pulls that fit into a socket routed into the drawer front. With all this in mind, let's roll up our sleeves and jump to it!

Written by: Erich Lage; Project Design: Dillon Baker

Construction Overview / OVERALL DIMENSIONS: 33½"W x 60"H x 20"D

Top attaches to the cabinet with screws through the rails

Grooves in underside of top mate with tongues in case

Maple top is notched around the legs and has curved ends that match the side stretchers

Glass shelves keep the look of the cabinet light and airy

Brass shelf supports and sleeves hold glass shelves in place

Release rod travels through drawer case top and behind drawers to release tray

Four drawer sizes give you plenty of storage options

Spalted maple on drawer, tray, and door adds interest to the cabinet

Rabbeted dovetails hold the fronts to the drawer sides

Tapered cherry legs are shaped on the outer faces

Thick tray parts add strength and stability

Spring block, spring steel bar, and release tag make up the tray release mechanism

▲ A tray that's tucked under the large drawer is opened by pushing a release bar at the back of the case. To close the tray, slide it back into the cabinet until the tab hooks it.

▲ Spalted maple drawer fronts and shop-made wenge pulls play together well. The socket and the slot that's routed into the drawer face provides plenty of room to grip the pull.

Illustrations: Dirk Ver Steeg

Start with the SIDE ASSEMBLIES

As tall and thin as the legs look, they're plenty strong enough to support the rest of the cabinet. The light look of the legs comes from two techniques, tapering the outer faces and softening the look even further by rounding the outer faces.

As shown in the main drawing, the side assemblies of this project are made up from a pair of legs joined with aprons, stretchers, and rails. The stretchers and aprons will ultimately form the sides of the drawer case. But for now, I started by focusing on making the legs.

MORTISES. The mortises for the aprons run parallel to the legs (detail 'a'). Creating them at the drill press is straightforward (Figure 1 on the next page). However, the mortises for the stretchers and drawer divider (parts of the base assembly you'll make later) are perpendicular to the leg, so they require a different tack (Figure 2).

DRESS THE LEGS. I moved over to the table saw to cut the tapers on the two outer faces of the legs (Figure 3). This calls for a long tapering sled. (See Shop Notes on page 64 for sled details.)

Next up is rounding the faces you just tapered. Above the main drawing are two patterns. One is for the top of the leg, the other for the bottom. Transfer these patterns to hardboard if you like, or tape them to the top and bottom of the leg. With a sharp pencil, trace the profiles on the ends of the legs. Now you're set up to shape the outer faces with a block plane (Figure 4).

JOINERY. It's time to step back to the table saw. Begin by sizing the parts for the stretchers, aprons, drawer guides, and rails. Follow this up with making the grooves in the stretchers for the plywood parts (Figure 5).

Next, focus on making the tenons on the stretchers and rails, as you see in Figure 6 (and details 'c' and 'd'). You'll need to cut the 45° angle on the ends of the stretcher tenons with a hand saw. Then drill holes in the rails for the top.

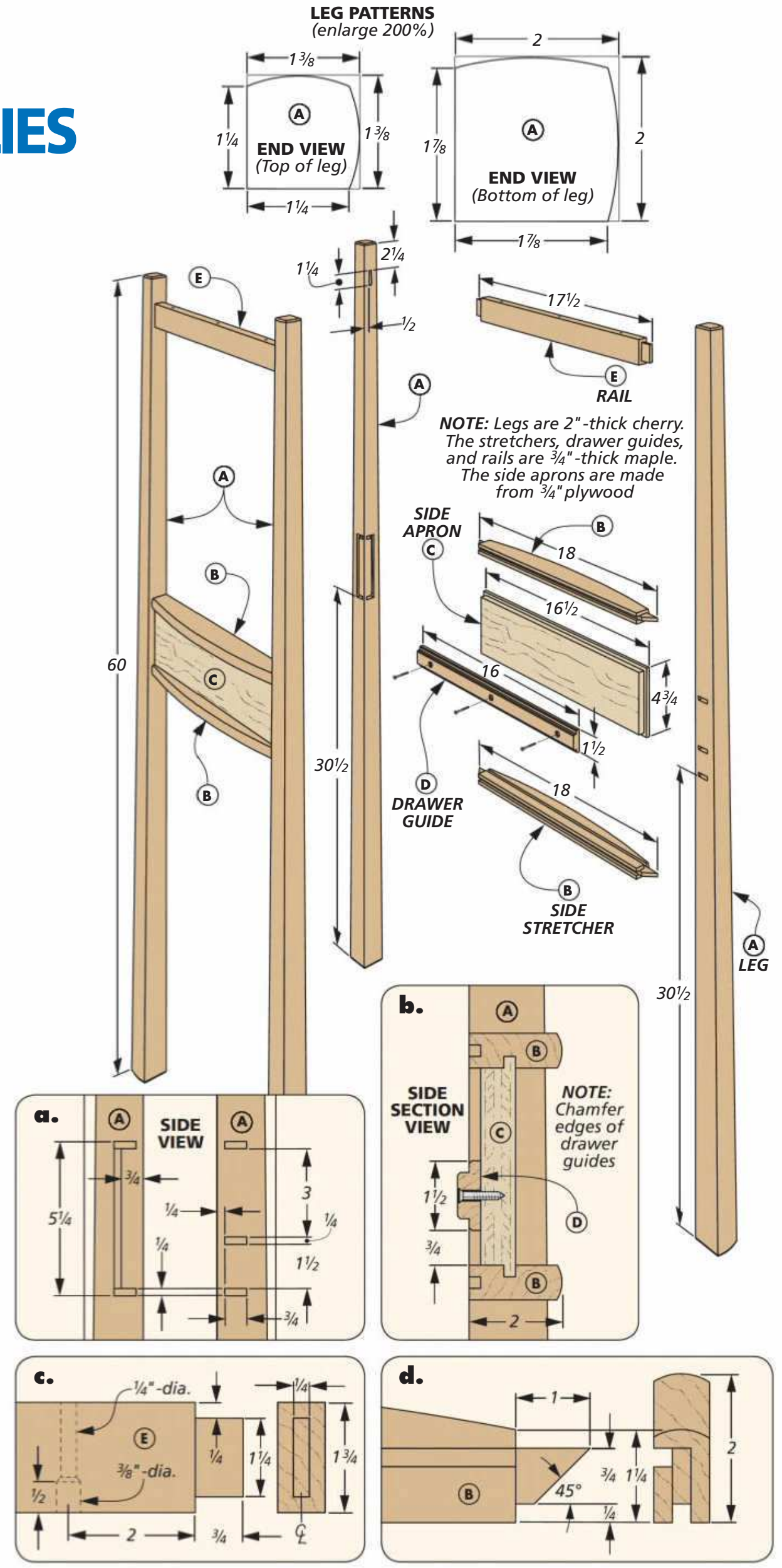

CURVE ON THE STRETCHERS. The stretchers have a curve on the outside edge. It's a decorative element that gets repeated on the edges of the top. To make this curve uniform, I made a template the width of the curve to use on all the pieces. One half is used as a template to draw the curve on the workpiece, the other half is used as a fence on the router table along with a convex router bit to shape the curve (Figure 7). There's an online extra of the pattern available at *Woodsmith.com*. Now, cut the rabbets on the aprons (Figure 8).

DRAWER GUIDE. The hardwood drawer guides attached to the aprons support the drawer and guide the tray. Cut the rabbets at the table saw (Figure 9) then drill the countersunk holes. To finish this phase, glue up the sides and install the drawer guides.

How-To: MAKE THE SIDE ASSEMBLY PARTS

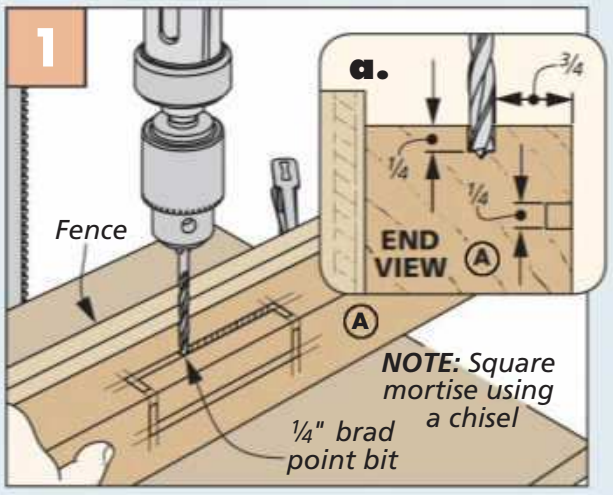

Mortises for Apron. Lay out and drill the holes for the shallow mortises in the legs that hold the aprons.

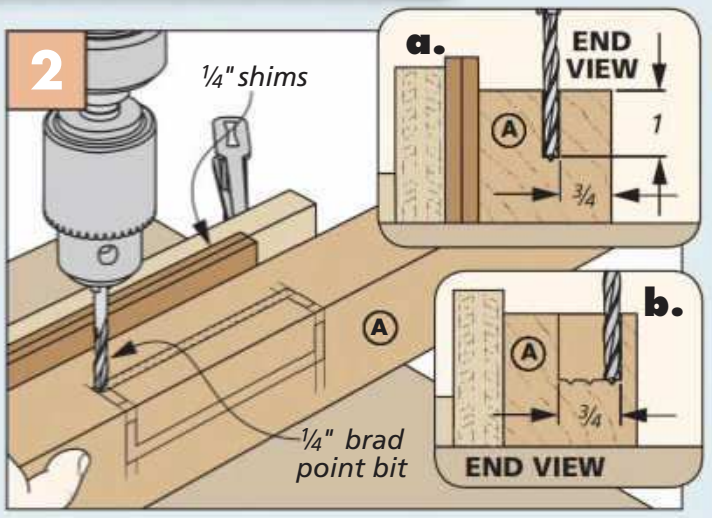

Mortises for Stretchers. While still at the drill press, use a pair of shims to make the perpendicular mortises for the stretchers.

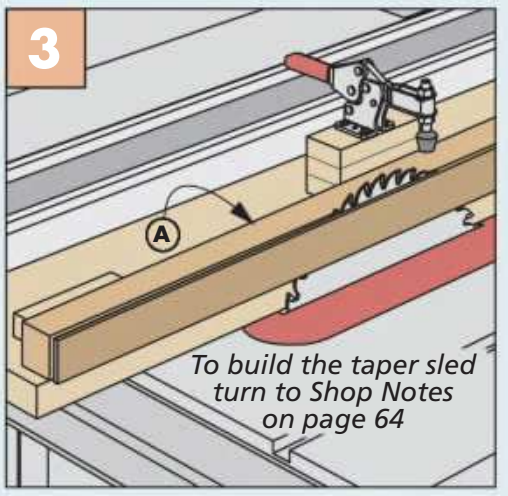

Taper Legs. After tapering the first side of the leg, rotate it into position for the second taper.

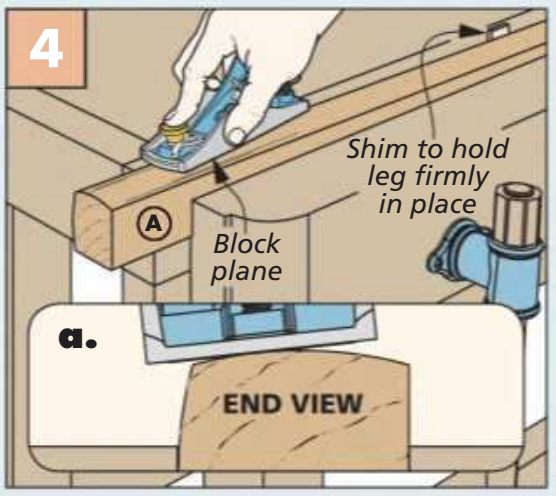

Rounding the Tapers. Shape the rounded contour of the outer faces of the legs with a block plane.

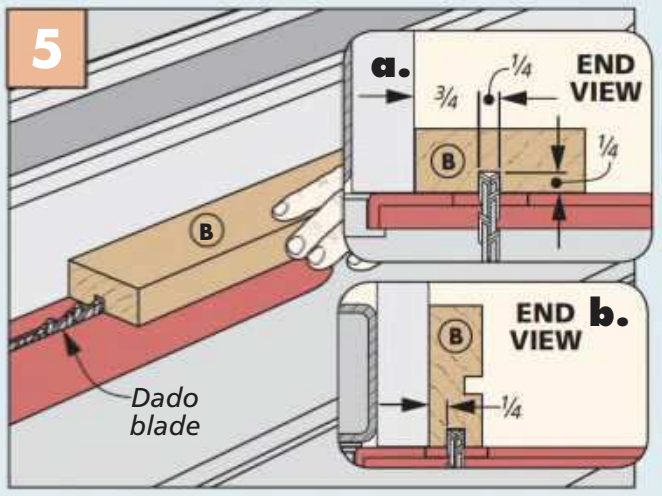

Grooves in Side Stretchers. Using a dado blade, cut the grooves in the stretchers for the aprons, top, and bottom.

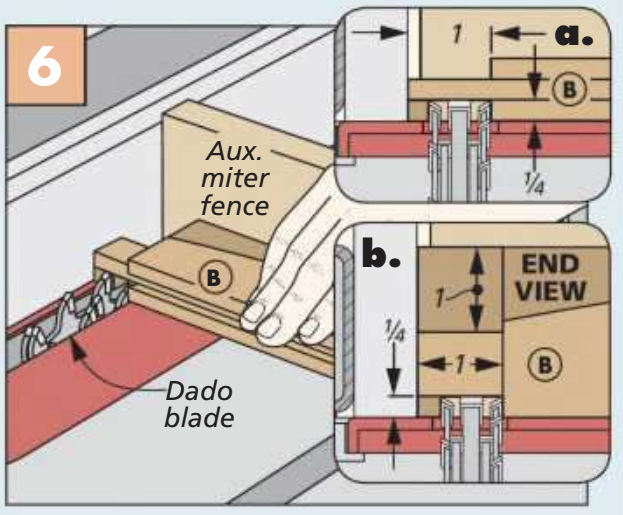

Stretcher Tenons. After cutting the cheeks and short shoulder, adjust the blade to cut the deeper shoulder.

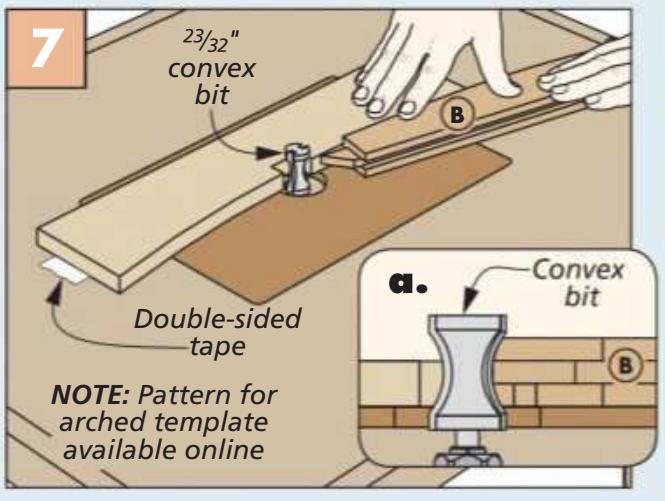

Curve on the Stretchers. To dress the edge of the stretchers, use a convex router bit and fence at the router table.

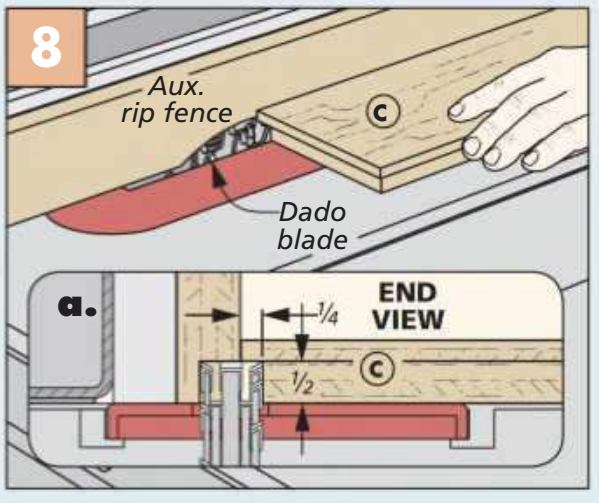

Apron Joinery. Cut the rabbets on the apron pieces at the table saw with a dado blade buried in an auxiliary fence.

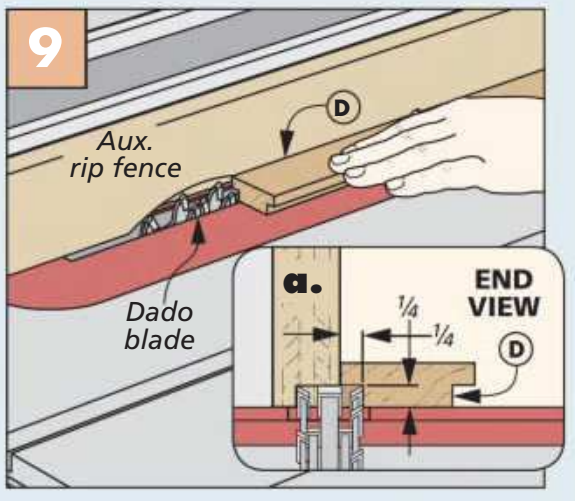

Drawer Guides. Back at the table saw, cut the rabbets in both edges of the drawer guides.

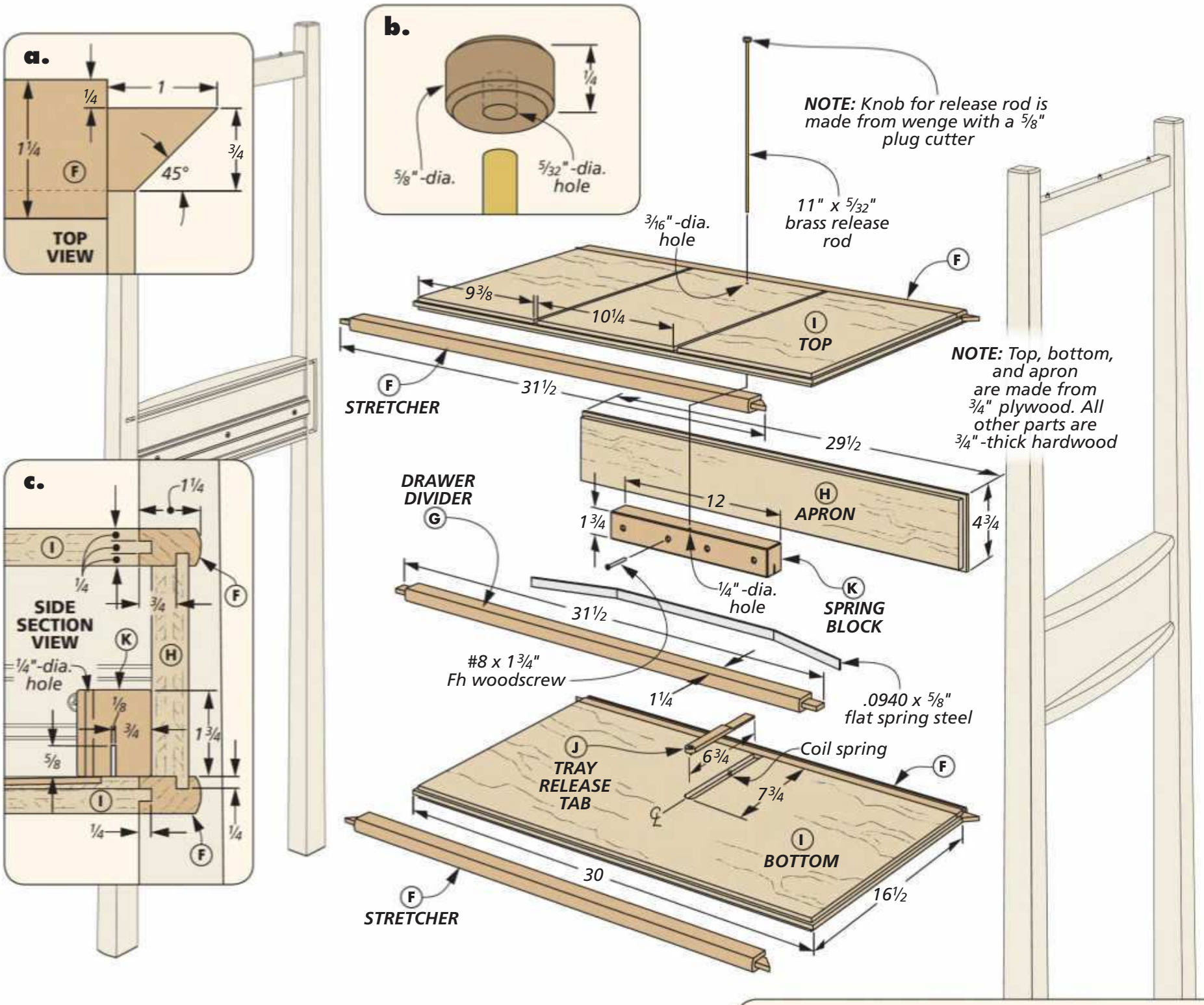

Make the DRAWER CASE

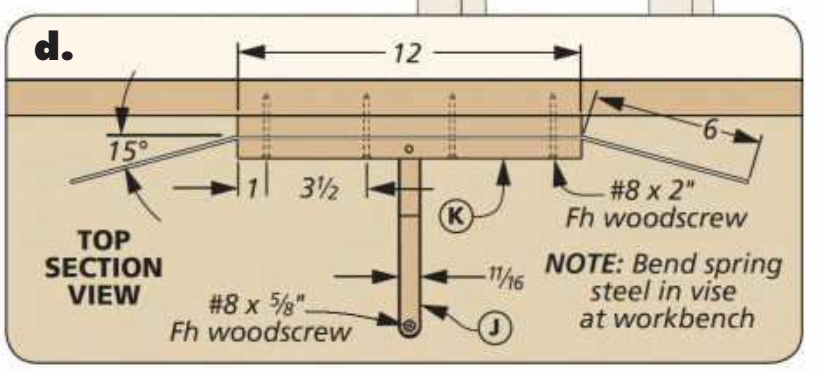

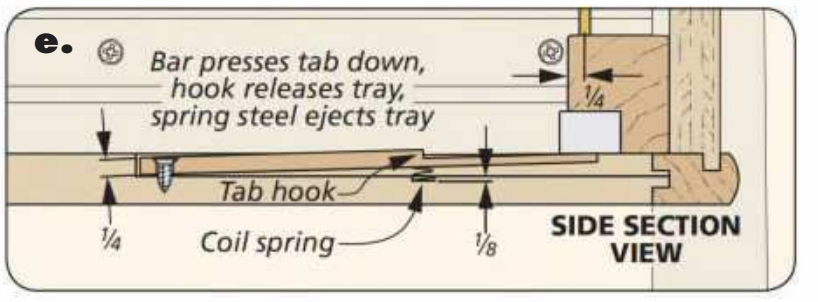

With the sides assemblies out of the way, I turned my attention to what brings them together — the remaining parts of the drawer case. These pieces align with the stretchers and aprons you built into the sides. As you see in the drawing above, it's comprised of three plywood parts. The top and bottom are trimmed with hardwood stretchers. The apron that runs across the back is captured between the stretchers.

You'll notice at the front there's a divider that separates the tray and large drawer. All these hardwood parts have the same profile routed on the edges as the side stretchers earlier. There are also some inner working parts to open the tray. I'll get to those shortly, but to begin, I started with the case parts.

HARDWOOD PARTS. First off, size all of the hardwood pieces and cut the grooves in the stretchers. Then move on to making the tenons in the stretchers and drawer divider. Trim the tenons on the stretchers as you did on the side stretchers. Then, as before, rout all the edges with the convex bit.

PLYWOOD PARTS. Now turn your attention to the plywood parts. The apron has the same rabbets as the side aprons you made before. The top and bottom pieces have tongues on all four edges and that's the best place to start (Figure 1). Follow this by cutting a pair of dadoes in the top of the case (Figure 2). Now it's time to take a look at those inner workings I mentioned earlier.

TRAY CHALLENGES. The tray that's housed below the large drawer (both of these get made later) has no knobs or pulls

on the front face. While this keeps the design of the project sleek, it creates the problem of how to slide the tray out of the base. Dillon Baker, the designer behind this project, came up with a clever solution.

HOW IT WORKS. As you see in the main drawing and details 'd' and 'e', there's a piece of spring steel in the back of the case that's held in place with a spring block. This bent piece of steel pushes the tray forward when a release tab (which has a coil spring under it to hold it above the surface) is depressed. This is done via a rod that travels through a hole in the top. To stow the tray, just slide it back in until its back rail is hooked by the notch in the release tab.

With all that said, Figure 3 shows how to use a router and straight bit to cut the slot in the bottom to recess the tray release tab. Also, drill a hole in the recess for a coil spring (Figure 5).

INNER PARTS. Next up is the tray release tab. Start off by sizing the piece and drill the mounting hole in the end. After rounding the end, move to the band saw to cut the notch that the tray seats against (Figure 4). Follow this by dealing with the spring block. Details for it, and making the spring, is in the main drawing and details 'c' and 'd'.

PRE-ASSEMBLY. To avoid anxious assembly moments, it's best to glue the stretchers to the plywood pieces first. With the coil spring in place, install the tray release tab in its slot with a screw (Figure 5). And to wrap up this prep phase, clamp the apron in place and attach the spring block assembly to it.

ASSEMBLY. To begin the glue up process, just lay one of the side assemblies on the bench, apply glue to the tenons of the base pieces and fit them into the side (Figure 6). After fitting the other side, stand the assembled sides and case up, confirm everything is square and apply clamps until the glue sets.

How-To: BUILD THE CASE & TRAY MECHANISM

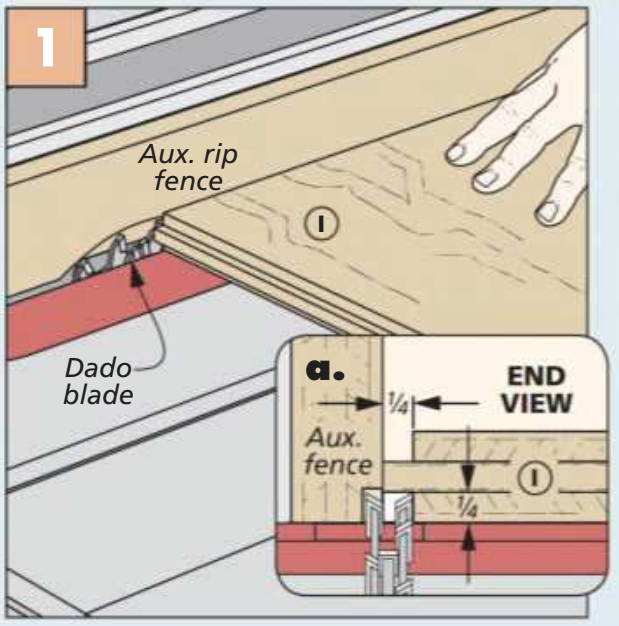

Tongues First. Cut the rabbets that form the tongues on all the edges of the top and bottom.

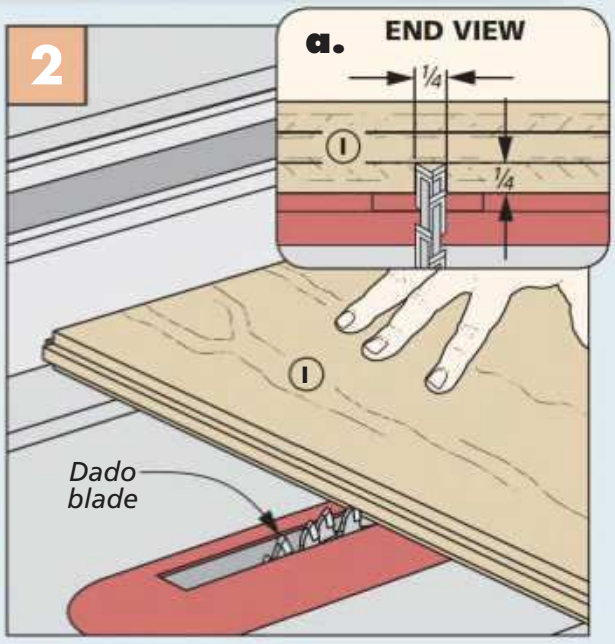

Dadoes for Case. The top has two dadoes on its face that will mate with the tongues on the upper case.

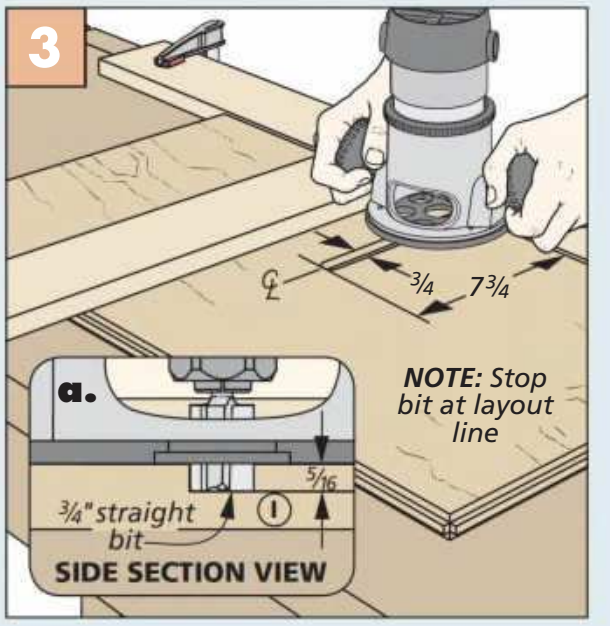

Slot for Tab. A router and T-square fence will give you the best accuracy when making the slot for the tab.

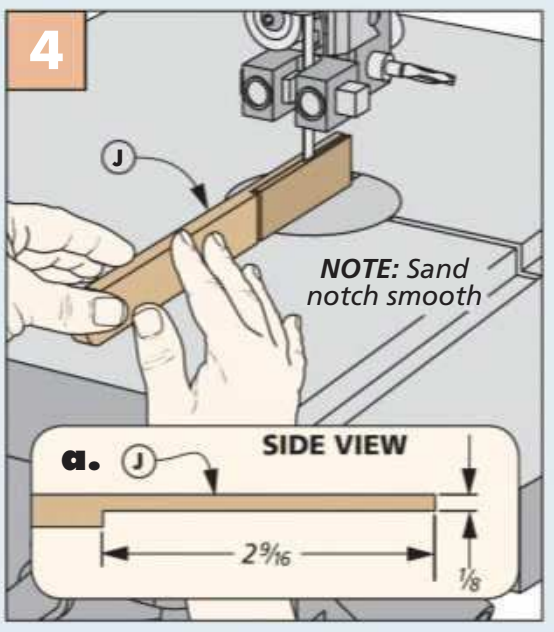

Shape the Release Tab. After laying out the release tab, cut the notch at the band saw.

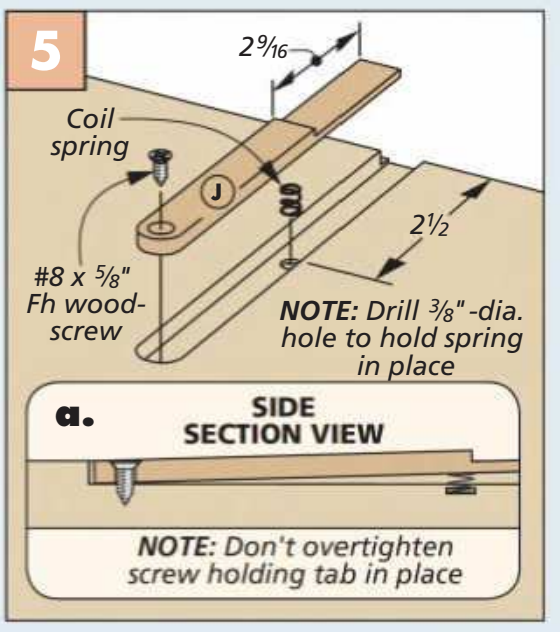

Install the Tab. Screw the release tab in the slot in the bottom with the spring in place under the tab.

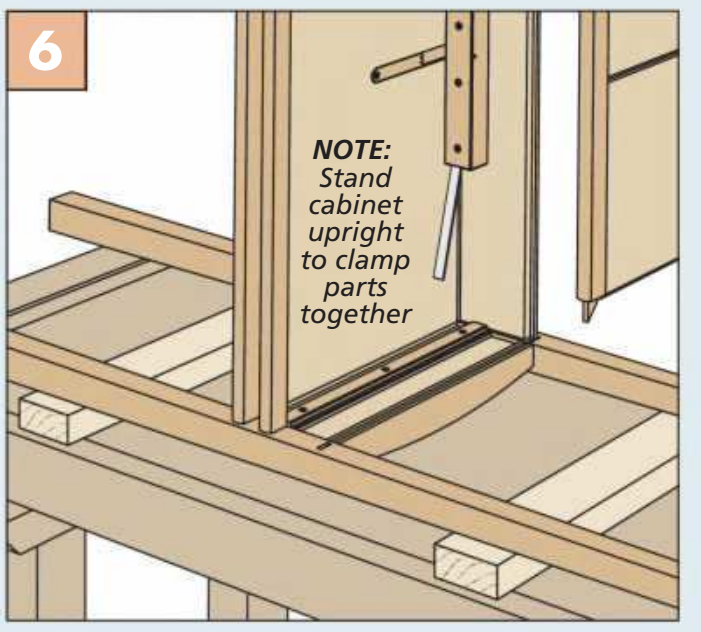

Assemble. With one side of the cabinet face up on the workbench, install the case bottom and top, then add the other side.

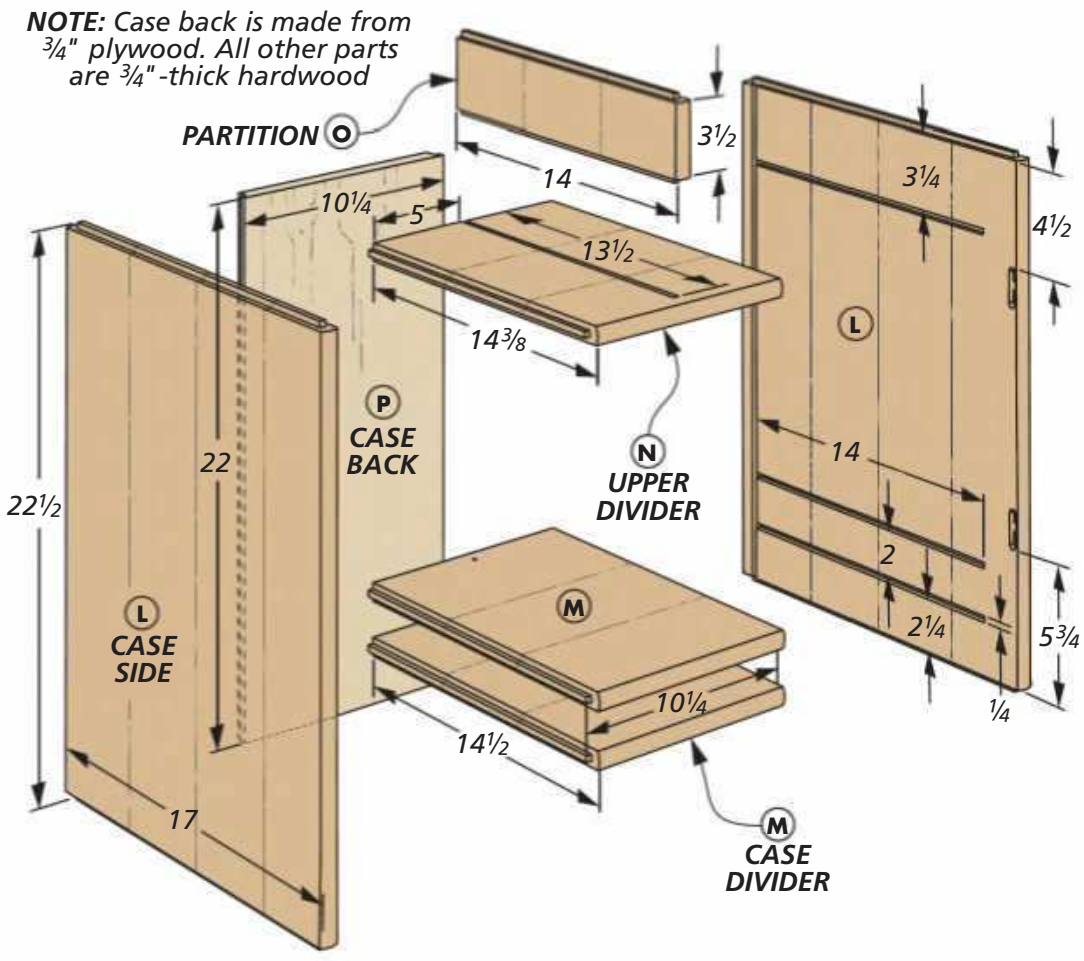

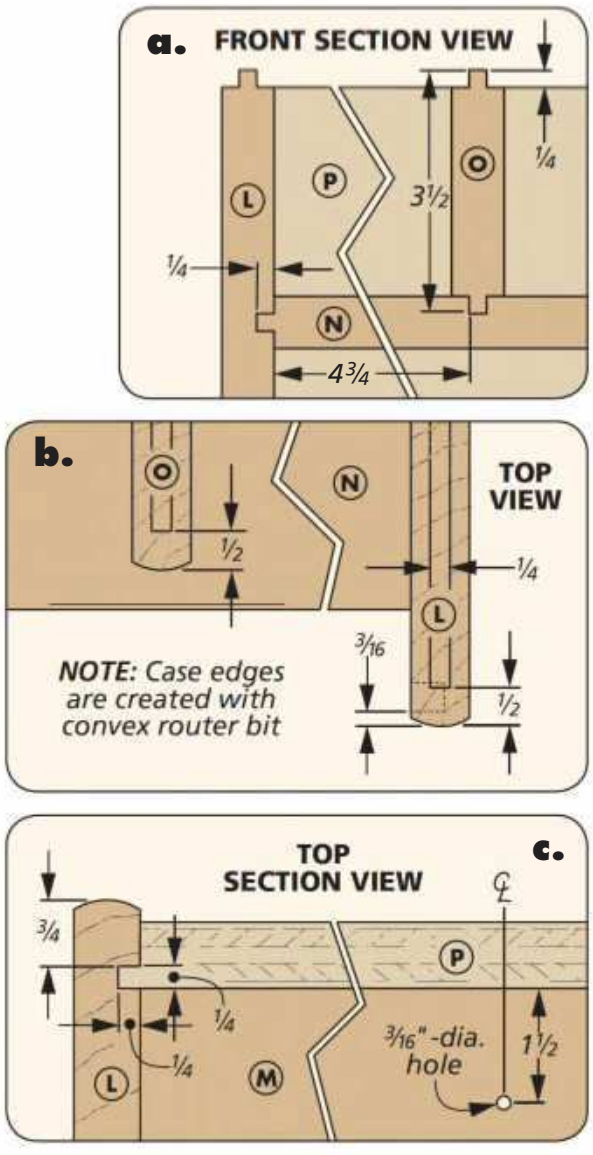

Adding the UPPER CASE

Next, I focused on the upper case. This narrow case is centered in the cabinet and is sandwiched between the drawer case and the top of the cabinet. It's held in place with tongue and dado joinery.

For a finished appearance, the plywood back is housed in a groove cut in the sides. These parts are capped off with a hardwood top that's joined to the case and attached to the rails.

GROOVES & DADOES. To get the ball rolling, glue up oversized panels for the sides. Then you can trim them to final size. Over at the router table, cut the groove for the back that I was just talking about with a straight bit. Detail 'c' shows where to locate the groove.

Figure 1 below shows using a simple T-square fence to rout the stopped dadoes in the sides and upper divider. Hold on to this T-square fence, it'll come in handy several times on this project. Before moving on to the dividers and partition, I made a jig to cut the mortises in the sides for the hinges that'll be installed later (Figure 2). These would be too hard to rout once the case

How-To: MAKING THE CASE PARTS & TOP

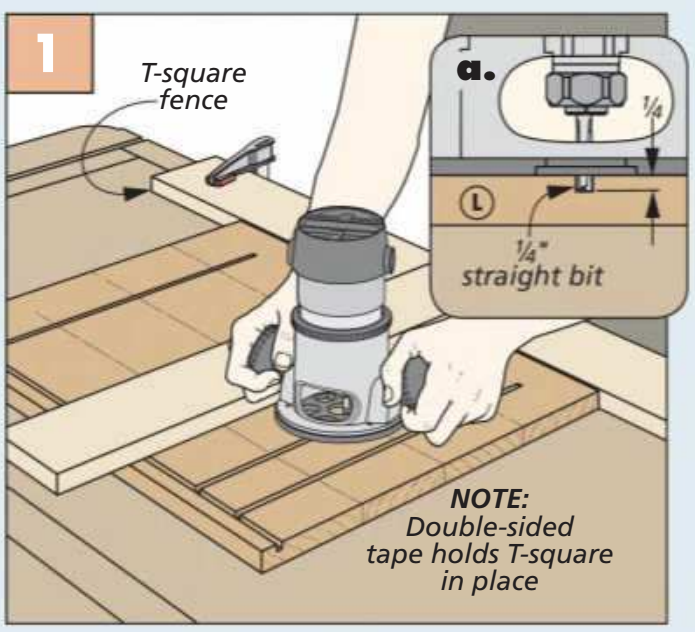

Stopped Dadoes. Using a shop-made T-square as a fence with your router lets you make stopped dadoes in the case sides.

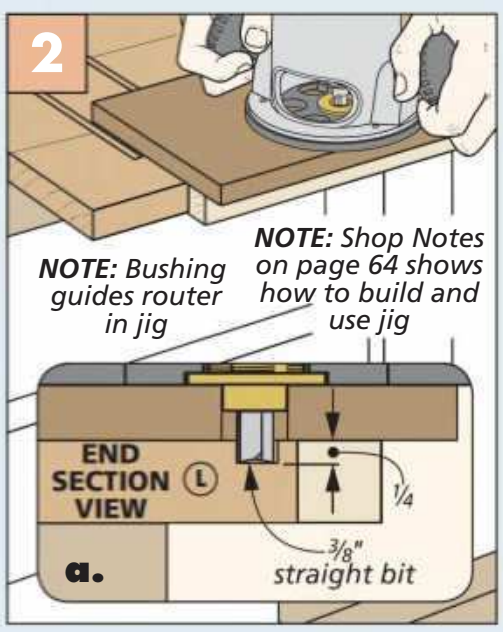

Mortise for Hinge. A router and jig make perfect mortises for the hinges in the case sides.

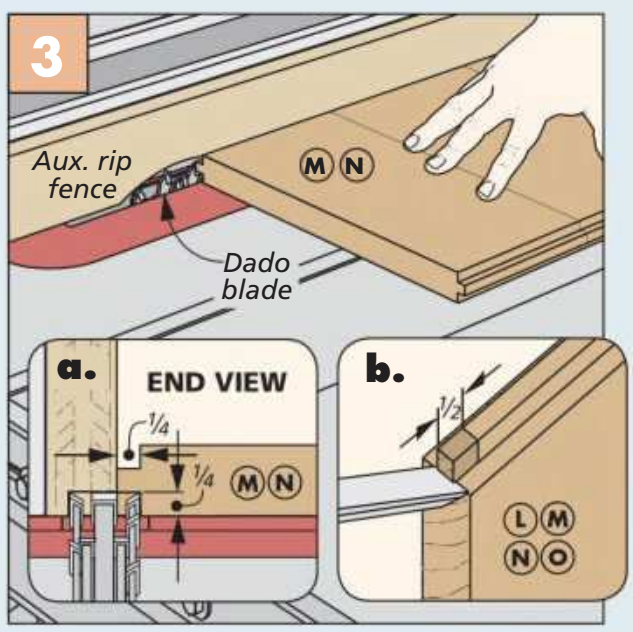

Tongue Time. Cut rabbets to create tongues on the ends of the case parts. Then trim the shoulders as needed.

is assembled. It's a lot easier to do this now at the bench. The details for making the jig are in Shop Notes on page 64.

INNER PARTS. Moving forward, it's time to cut the tongues on the case sides, dividers and partitions. These steps are shown in Figure 3. There's one more detail to mention. You need to drill the holes for the tray release rod in the two lower dividers. The hole location is shown in detail 'c' on the previous page. Before gluing up the case, remember to rout all the edges with the same convex bit at the router table, as before.

THE TOP

The hardwood top has notches to fit around the legs and curves on both ends. As you see in the main drawing, it's held in place two ways — first, by three dadoes cut in the underside that mate with the tongues in the case. Second, by screws through the rails.

SHAPING THE TOP. With efficient woodworking in mind, I started by shaping the basic contour of the top — the notches (Figure 4). This let me set the top in place on the cabinet and confirm the stopped dado locations.

Back at the bench, use the template you made earlier for the side stretchers to mark and trim the curved ends of the top. Figure 5 shows you where to position the template. Then repeat the process of shaping the edges of the top at the router table with the curved fence.

ROUT STOPPED DADOES. On the underside of the top, I used the T-square fence to make the stopped grooves. Figure 6 gives you a look at how to do this.

ASSEMBLE. With clamps and supplies on hand, you can install the top. To allow wood movement, only spot glue the case to the drawer case and top before fastening the top to the sides with screws through the rails.

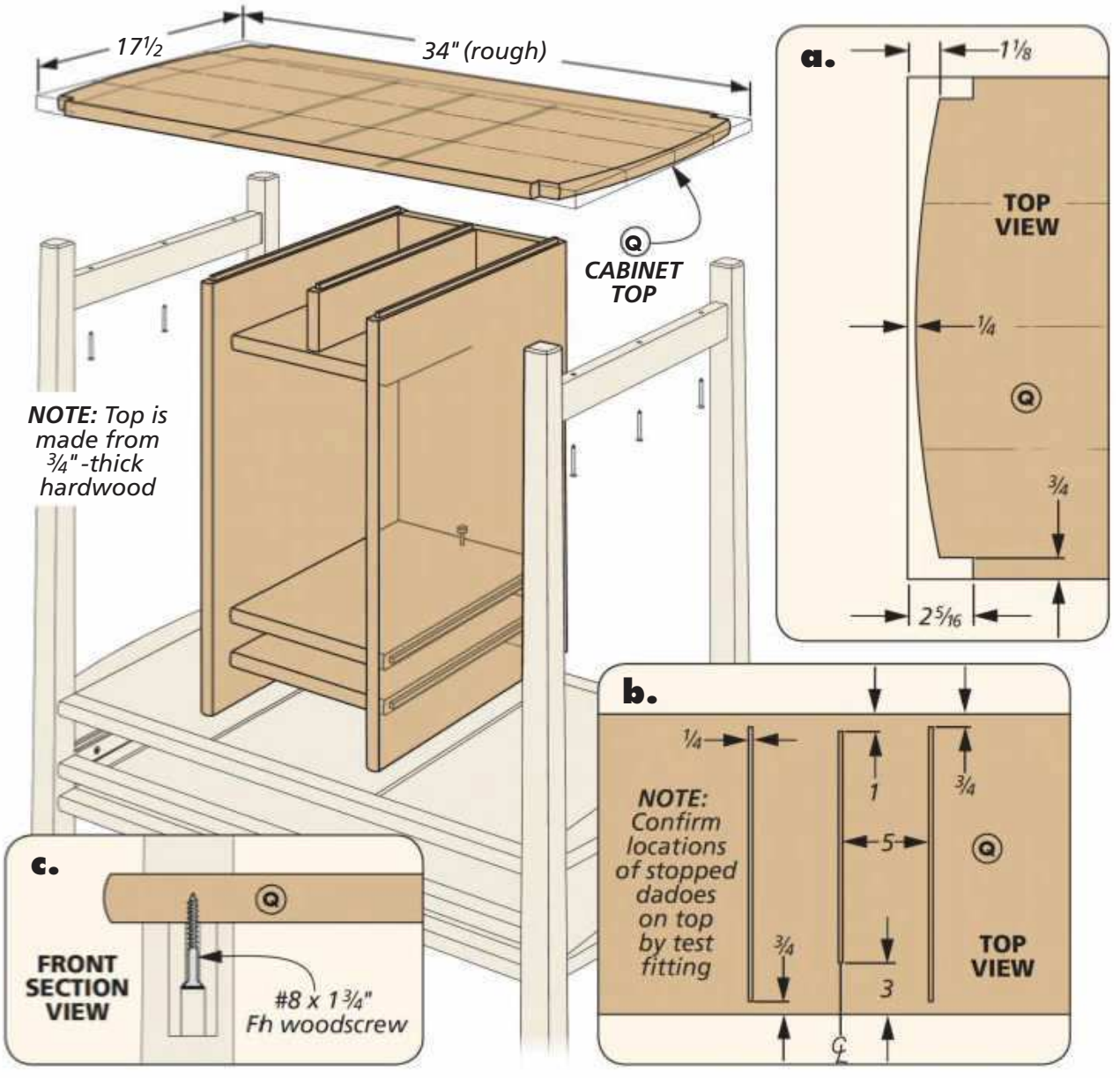

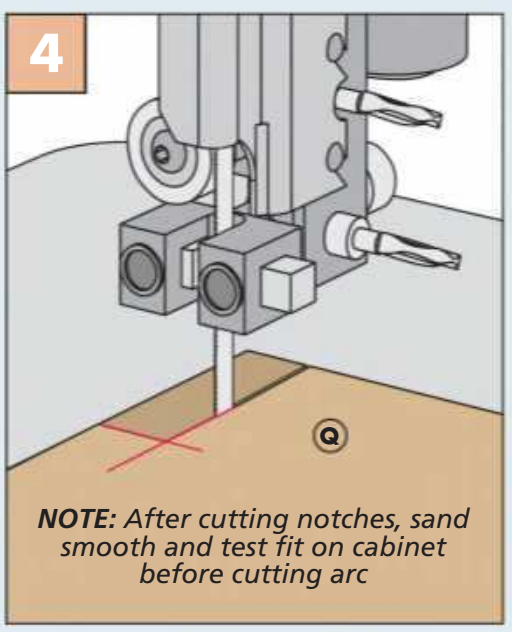

Notch in the Top. The four corners of the top are notched for the legs at the band saw.

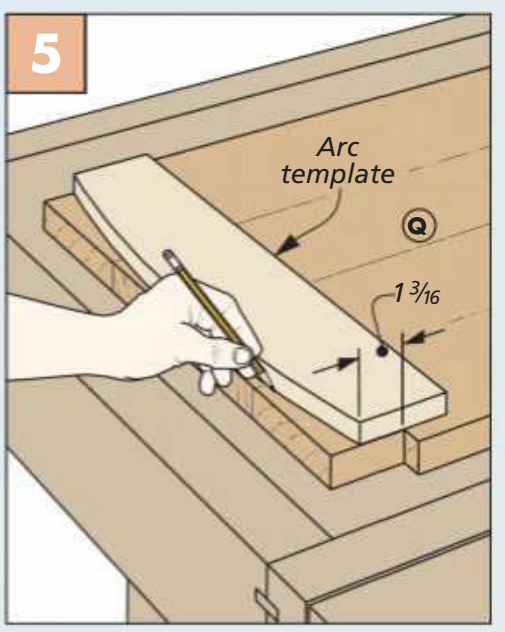

Arc Layout. Trace the arc pattern on the top and shape it as you did on the side stretchers.

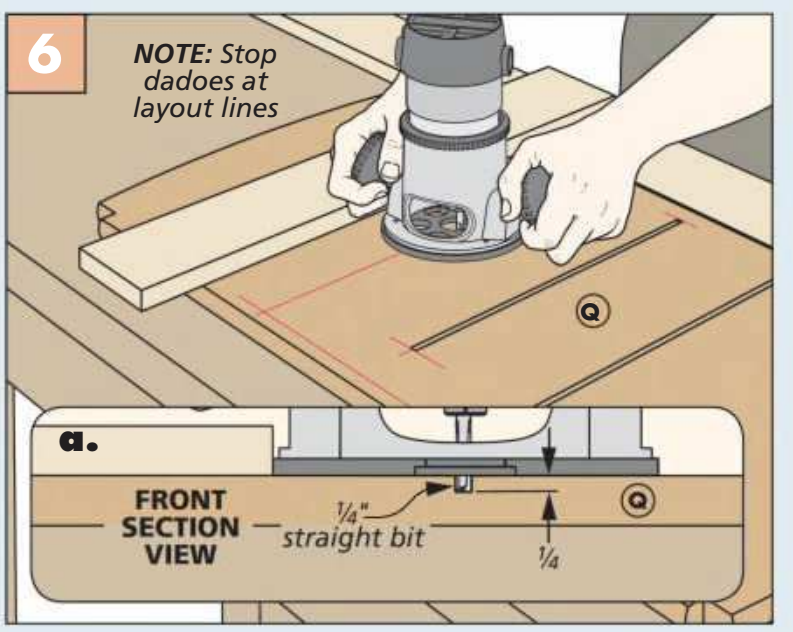

Stopped Dadoes in Top. To rout the stopped dadoes, carefully lower the router into the cut and rout until you reach your layout lines.

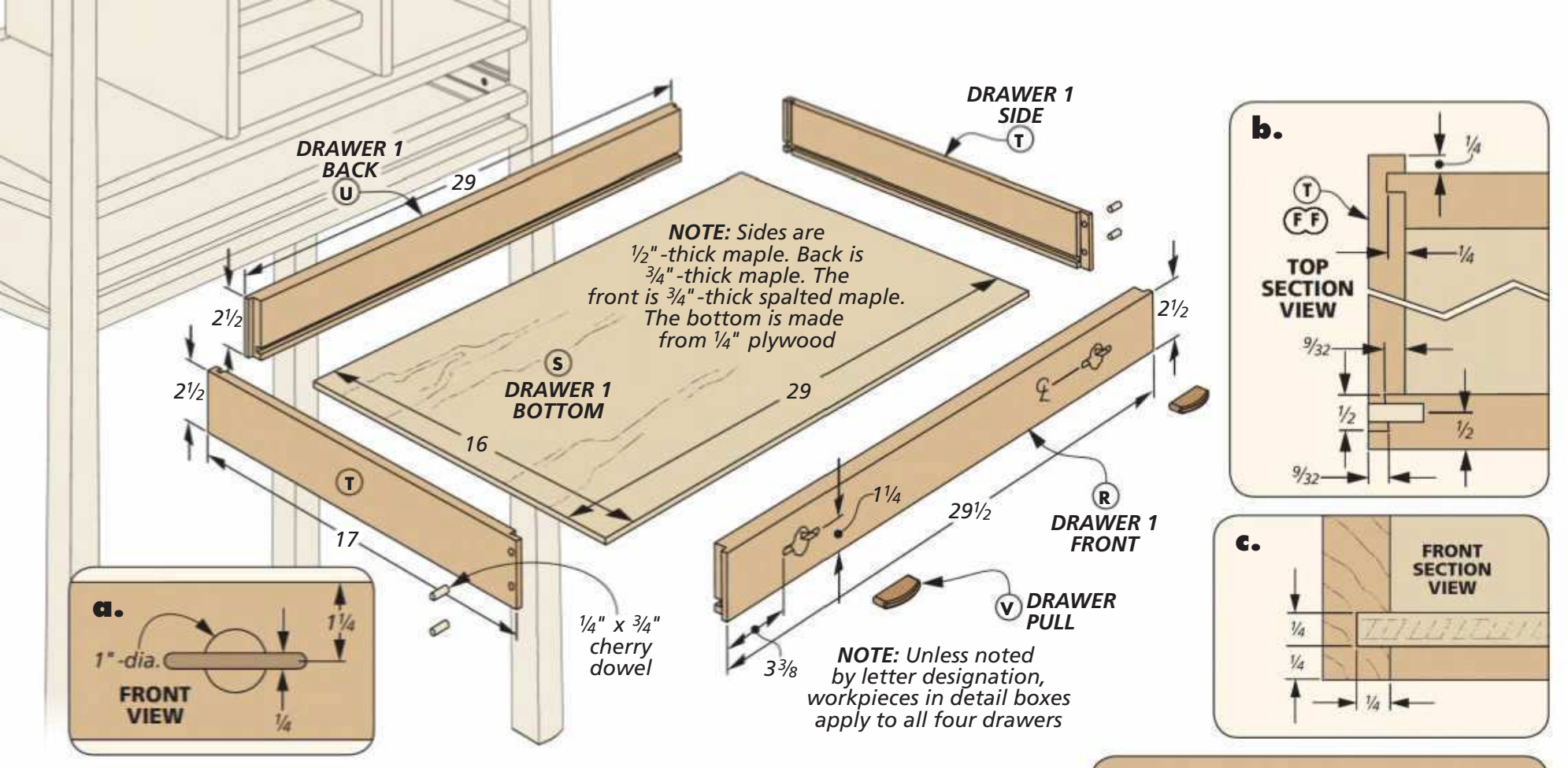

Build the DRAWERS

The five drawers for this cabinet provide plenty of storage options. It starts with a large drawer that shares space in the drawer case with a tray that you'll build shortly. There are four more drawers that are in the upper case. Aside from the dimensions, the construction is the same for all five drawers.

All of them have hardwood fronts, sides, and backs. The fronts are joined to the sides with rabbeted dovetails, and that's where I started working.

RABBETED DOVETAILS. The process starts with installing a 7° dovetail bit in the router table. First, cut the dovetails in all the fronts. All you have to do is lay them flat on the table and use a backerboard to prevent blow out. Figure 1 shows this procedure. The tall auxiliary fence you see here lets me set up the router table one time for both parts. As for the dovetails in the side, all you have to do is stand the inside face against the fence, as you see in Figure 2.

Moving over to the table saw, cut the grooves for the bottoms in all the pieces, and the dadoes in the sides for the back. Then you can cut the tongues on the ends of the drawer back to fit (Figure 3). But don't assemble the drawers until the sockets and slots for the pulls have been

How-To: CUT THE DRAWER JOINERY

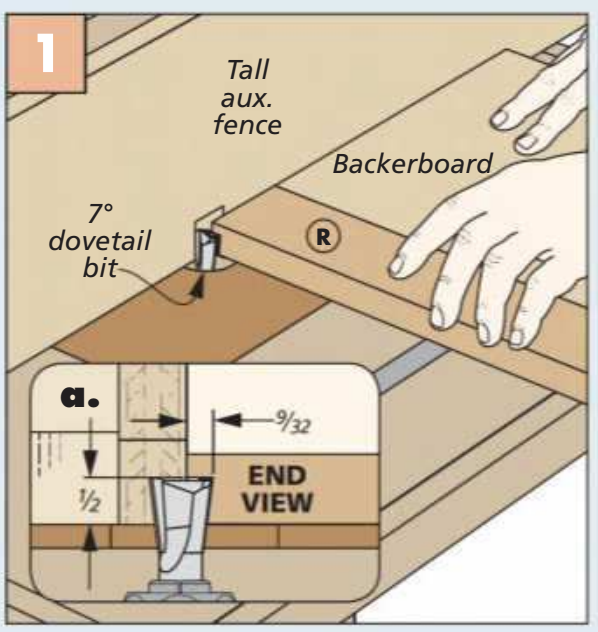

Drawer Fronts First. Cut the dovetails in the drawer front at the router table with a backerboard.

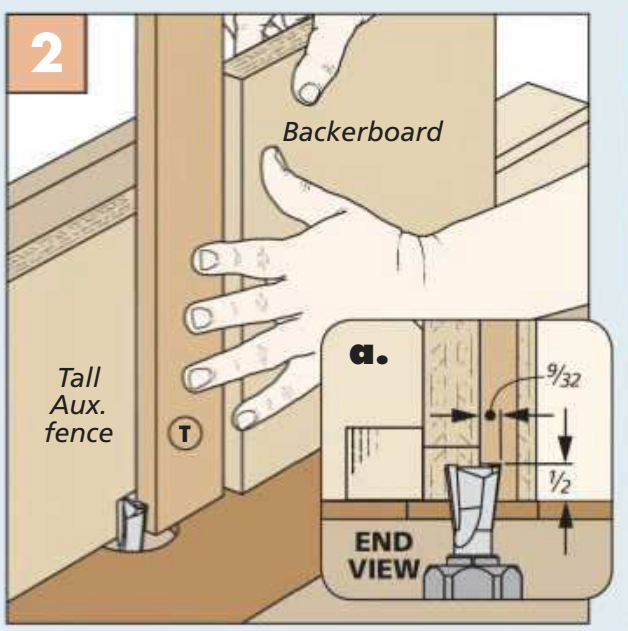

Drawer Sides Next. Leave the bit setup the same. But run the drawer side and backerboard against the fence.

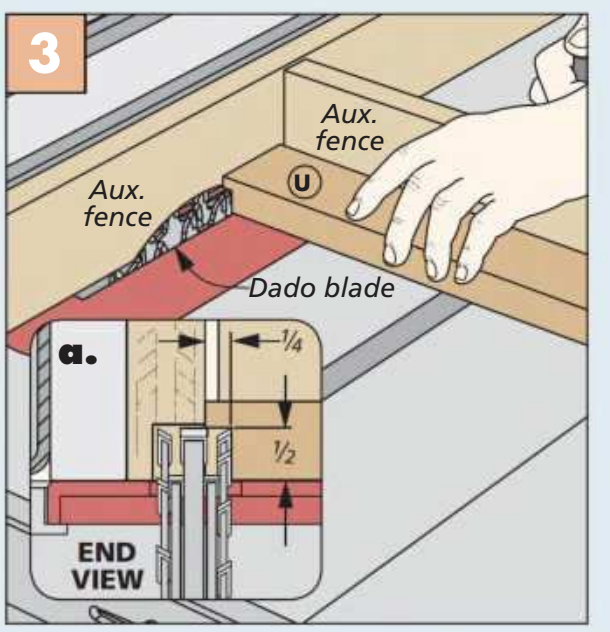

Drawer Back. Move over to the table saw and use a dado blade to make the tongues on the drawer back.

milled in the fronts. Those two tasks are next on the agenda.

SOCKET & PULL. The organic look and feel of this cabinet are enhanced by the design of the pulls for the drawers and door on this project. It takes a little time to prepare the drawer front (making the socket) and machining the pull. In the end though, the effort is well worth it.

A 1" core box bit is used to make the socket. At the router table, I attached a stop to the fence and lowered the front onto the bit (Figure 1). From there it's just a matter of adjusting the fence and stop block for the width of each drawer front as you go.

The routine is similar for the slot. Here you use a ¼" straight bit. Mark start and stop lines on the fence, as you see in Figure 2. Like with the socket, you have to position the fence to center the slot on the drawer front.

ASSEMBLE THE DRAWERS. It's time to take a break from routing and assemble the drawers. When the glue is dry, you need to install some dowel pins through the dovetails. Over in Shop Notes on page 64, there's a drilling jig that makes quick work of this task.

DRAWER PULLS. Making and installing the pulls will finish up this phase of the project. Figure 3 shows how to make these thin accent pieces safely.

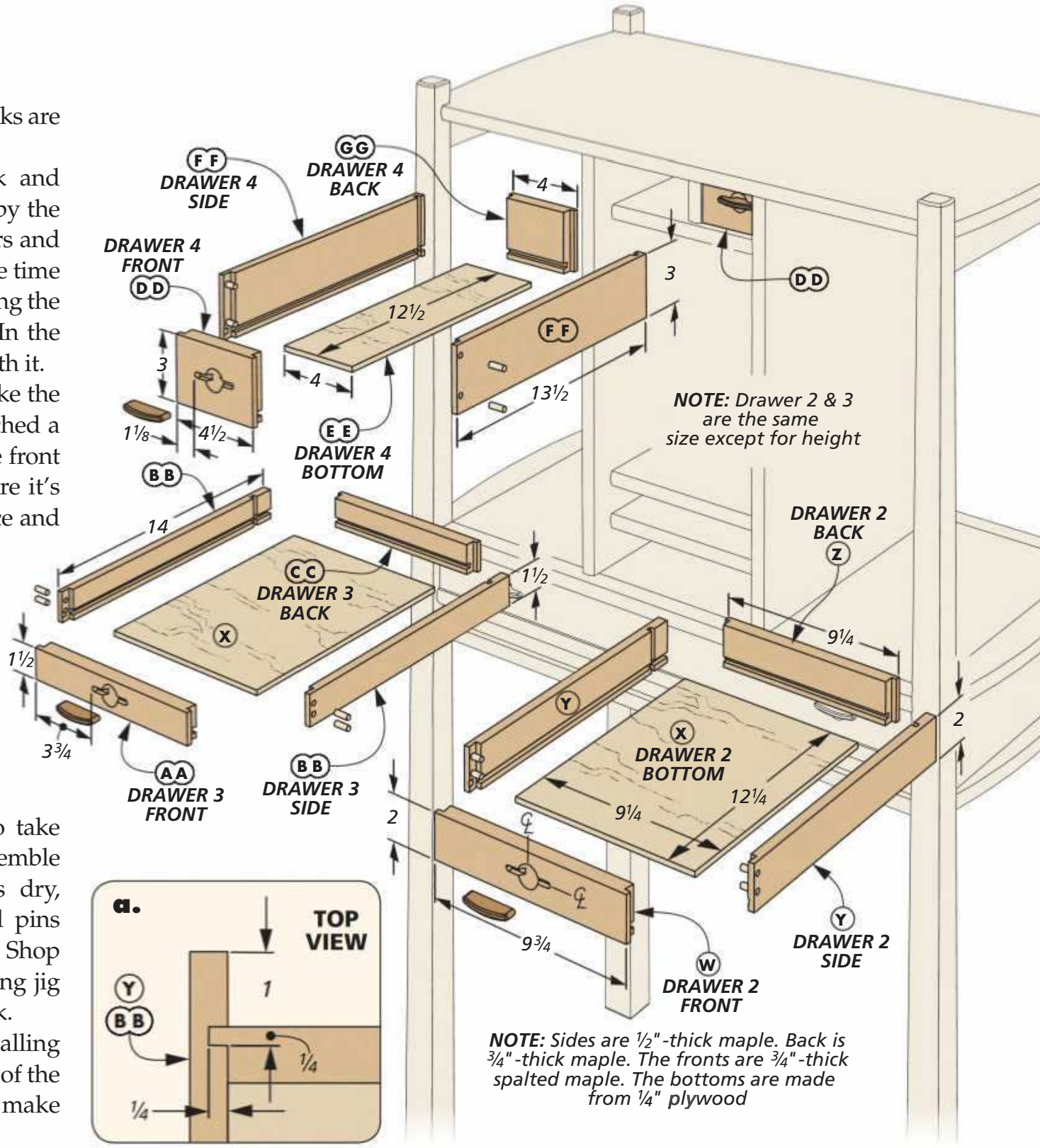

How-To: MAKE THE SOCKET & PULL

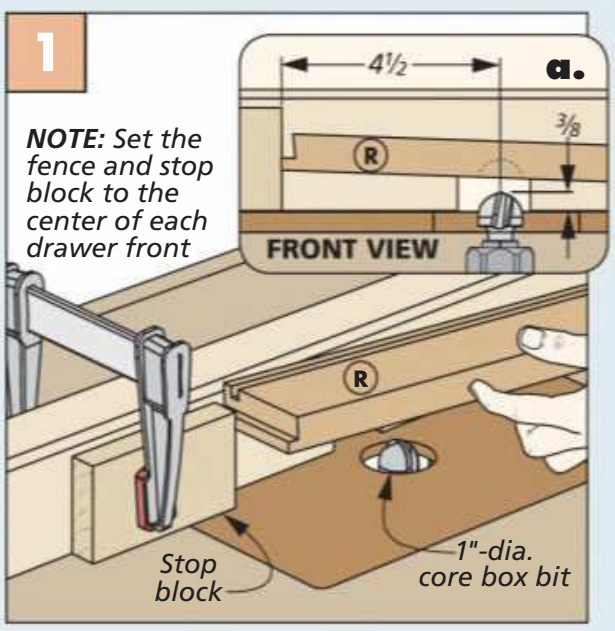

Socket to Me. A stop clamped to the router fence lets you perfectly bore the sockets in each drawer front.

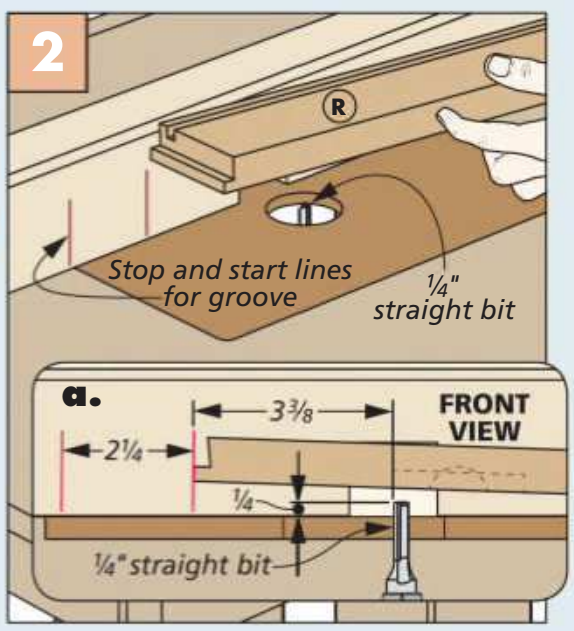

Slot for Drawer Pull. Exchange the bits in the router table to make the slots in the faces for the pulls.

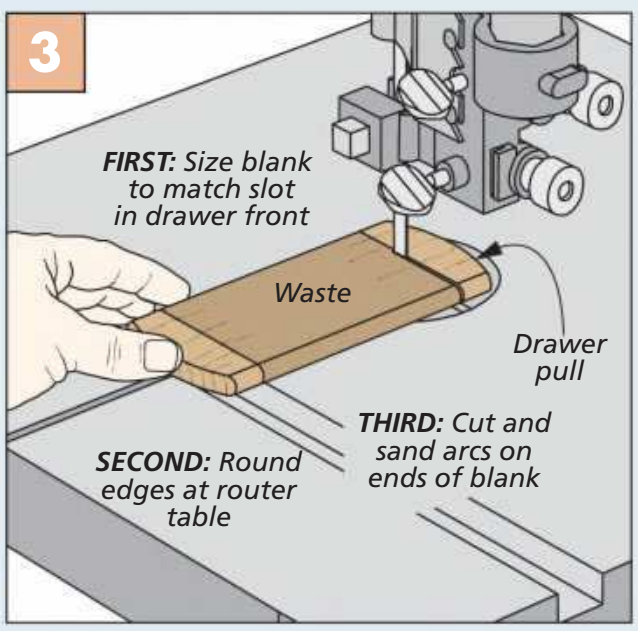

Pull Production. After cutting an arc on the ends of the thin hardwood blank, cut the pulls free at the band saw and repeat.

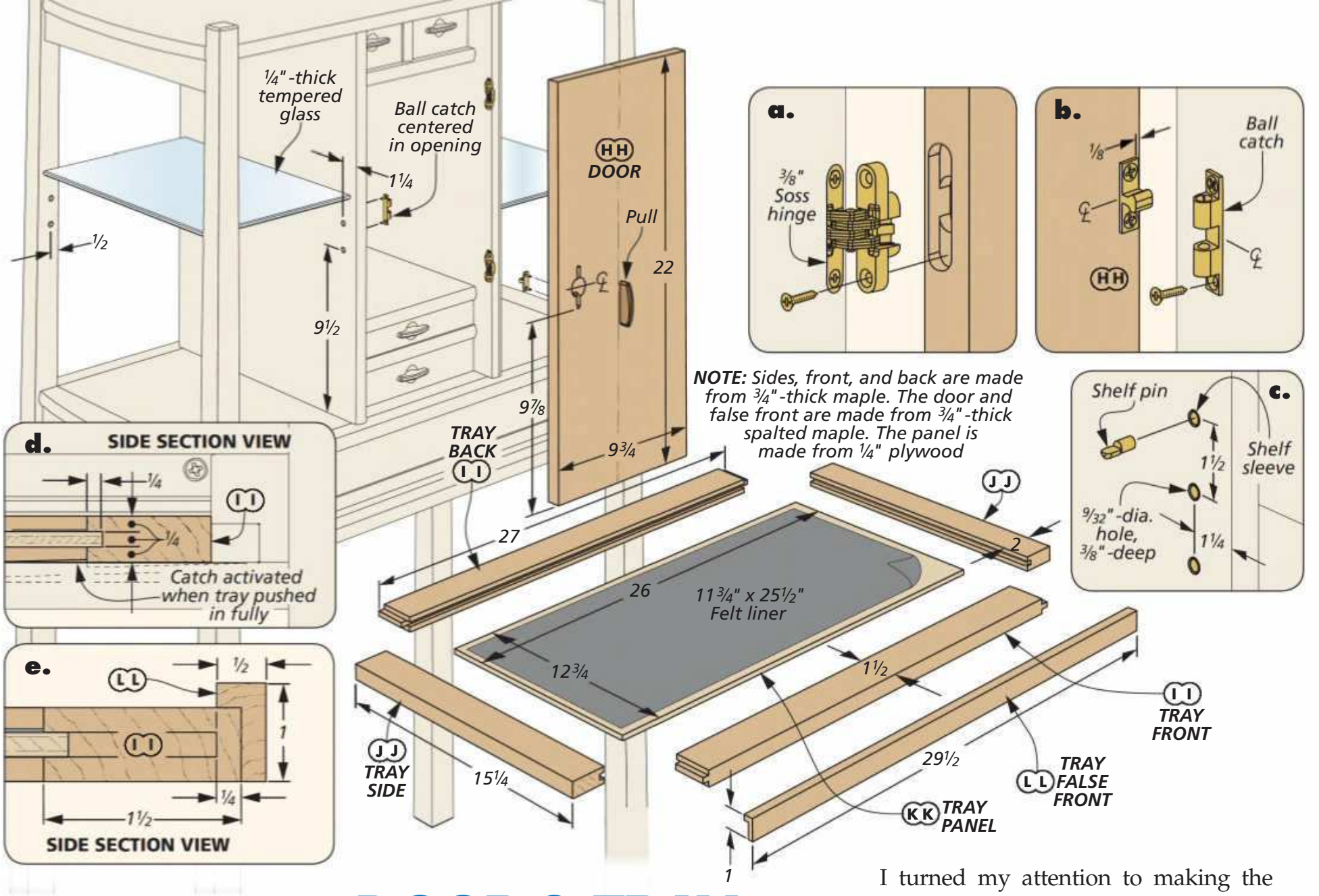

Creating the DOOR & TRAY

All that's left to complete the cabinet is to make the tray and the door. As you see in the drawing above, the tray fits in the cavity below the large drawer. The center of the tray is lined with felt to provide a bit of cushion. The door fits into the opening in the front of the upper case. I decided to start there.

DOOR DETAILS. After gluing up and sizing the door panel to fit the opening, I turned my attention to making the two mortises for the hinges. To locate the mortises, I held the door in the case opening and carefully transferred the center line of the case mortises to the door. The jig that was used earlier to make these mortises in the case works here as well. As Figure 1 shows, you'll need to use a shim to offset the jig on

How-To: DOOR & TRAY DETAILS

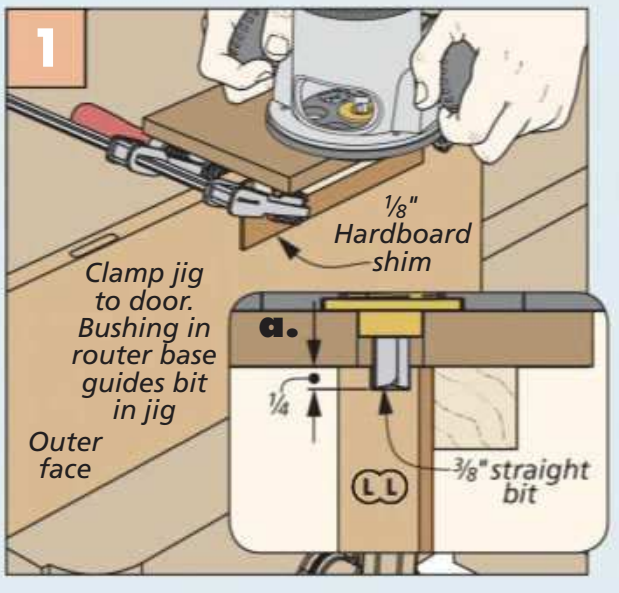

Mortises in the Door. With the addition of a shim, the jig used to mortise the case works here as well.

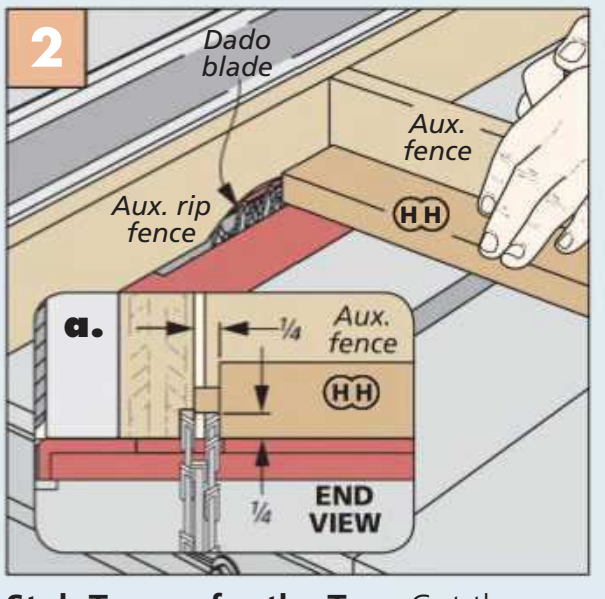

Stub Tenons for the Tray. Cut the rabbets that make the tenons at the table saw with a auxiliary fence.

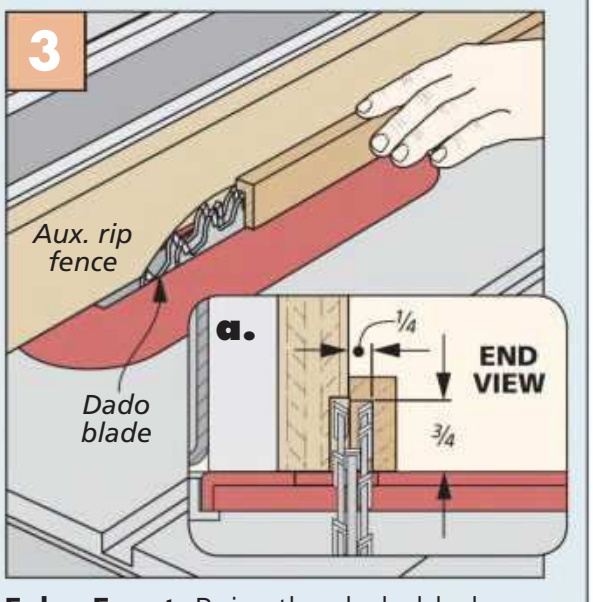

False Front. Raise the dado blade in the table saw to rabbet the false front to fit over the front of the tray.

the door. I follow this with routing the socket and slot for the door pull. With the door finished and in place, install the door catch shown in detail 'b'.

SHELF PINS. You might as well tidy up the last detail of the building process on the cabinet — drilling the holes for the shelf pins. Since the shelves are glass and the pins in the legs are visible, I chose to use sleeves in combination with the shelf pins. It gives a more polished appearance.

As for drilling the holes, I made a little hardboard template to the dimensions you see in the main drawing and detail 'c' on the previous page.

THE TRAY

To finish up the project it's time to focus on the tray. The main drawing shows all the parts required for this piece. It starts with some tried and true joinery at the table saw. Detail 'd' on the previous page shows the size of grooves needed in the front, back, and side hardwood pieces to hold the plywood panel.

TENONS. Figure 2 shows how to cut the tenons on the front and back frame pieces. With that task complete, and the plywood panel sized, go ahead and glue up the tray.

At this point, you want to check the fit of the tray before making and attaching the false front. This is pretty easy to do. Just slide the tray into its opening until the back rail engages the hook on the release tab. I did this a handful of times (to ensure everything operated smoothly). To eject the tray, press down on the tab with the release rod.

If the tray doesn't engage the hook when pressed in place, there's a simple remedy. Remove a little of the tray back shoulder by sanding or chiseling. Then they should lock together.

FALSE FRONT. The last milling process is a simple one at the table saw (Figure 3). With a dado blade buried in an auxiliary fence, cut a rabbet so the false front wraps around the tray front. Then you can glue it to the front of the tray.

FINISH. Two coats of lacquer on all the parts lets the natural beauty of the wood used on this project shine through. At last, it's ready to show off your family's favorite possessions. W

Materials, Supplies & Cutting Diagram

A	Legs (4)	2 x 2 - 60
B	Side Stretchers (2)	3/4 x 2 - 18
C	Side Aprons (2)	3/4 ply. - 4 3/4 x 16 1/2
D	Drawer Guides (2)	1/2 x 1 1/2 - 16
E	Rails (2)	3/4 x 1 3/4 - 17 1/2
F	Stretchers (4)	3/4 x 1 1/4 - 31 1/2
G	Drawer Divider (1)	3/4 x 1 1/4 - 31 1/2
H	Apron (1)	3/4 ply. - 4 3/4 x 30
I	Case Bottom/Top (2)	3/4 ply. - 16 1/2 x 30
J	Tray Release Tab (1)	1/4 x 3/4 - 6 3/4
K	Spring Block (1)	1 1/2 x 1 3/4 - 12
L	Upper Case Sides (2)	3/4 x 17 - 22 1/2
M	Upper Case Dividers (2)	3/4 x 14 1/2 - 10 1/4
N	Upper Divider (1)	3/4 x 14 3/8 - 10 1/4
O	Partition (1)	3/4 x 14 - 3 1/2
P	Upper Case Back (1)	3/4 ply. - 10 1/4 x 22
Q	Cabinet Top (1)	3/4 x 17 1/2 - 33 1/2
R	Drawer 1 Front (1)	3/4 x 2 1/2 - 29 1/2
S	Drawer 1 Bottom (1)	1/4 ply. - 16 x 29
T	Drawer 1 Sides (2)	1/2 x 2 1/2 - 17
U	Drawer 1 Back (1)	3/4 x 2 1/2 - 29
V	Pulls (7)	1/4 x 3/4 - 2 1/4
W	Drawer 2 Front (1)	3/4 x 2 - 9 3/4
X	Drawer 2 & 3 Bttm. (2)	1/4 ply. - 9 1/4 x 12 1/4
Y	Drawer 2 Sides (2)	1/2 x 2 - 14
Z	Drawer 2 Back (1)	3/4 x 2 - 9 1/4
AA	Drawer 3 Front (1)	3/4 x 1 1/2 - 9 3/4
BB	Drawer 3 Sides (2)	1/2 x 1 1/2 - 14
CC	Drawer 3 Back (1)	3/4 x 1 1/2 - 9 1/4
DD	Drawer 4 Fronts (2)	3/4 x 3 - 4 1/2
EE	Drawer 4 Bottoms (2)	1/4 ply. - 4 x 12 1/2
FF	Drawer 4 Sides (4)	1/2 x 3 - 13 1/2
GG	Drawer 4 Backs (2)	3/4 x 3 - 4
HH	Door (1)	3/4 x 9 3/4 - 22
II	Tray Front/Back (1)	3/4 x 2 - 27
JJ	Tray Sides (2)	3/4 x 2 - 15 1/4
KK	Tray Panel (1)	1/4 ply. - 11 3/4 x 26
LL	Tray False Front (1)	1/2 x 1 - 29 1/2

- (6) #8 x 1" Fh Woodscrews
- (1) #8 x 5/8" Fh Woodscrew
- (4) #8 x 2" Fh Woodscrews
- (6) #8 x 1 1/2" Fh Woodscrews
- (1) .03" x 3/8" Compression Spring
- (1) .0940" x 5/8" x 60" Spring Steel Strip
- (1) 5/32" x 12" Brass Rod
- (1 pr.) 3/8" Soss Invisible Hinges
- (1) 43mm x 8mm Ball Catch
- (24) Brass Shelf Supports and Sleeves
- (1) 1/4" x 36" Cherry Dowel
- (1) 11 3/4" x 25 1/2" Felt
- (2) 1/4" x 10 1/16" x 15 15/16" Temp. Glass

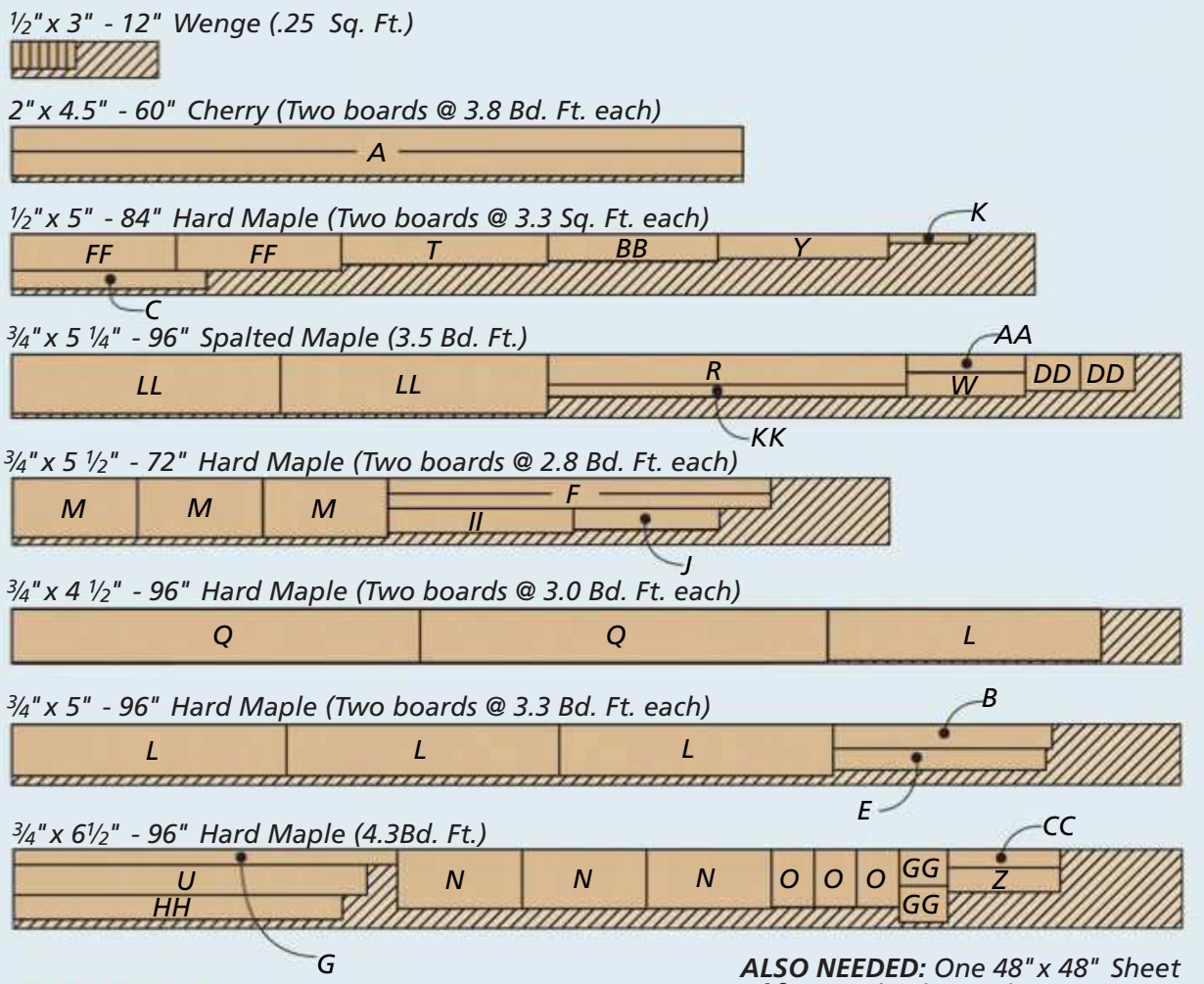

Woodsmith GO ONLINE EXTRAS

Templates for making the leg profiles, and the curved ends and top are available at Woodsmith.com

ALSO NEEDED: *One 48" x 48" Sheet of 3/4" Maple Plywood, One 48" x 48" Sheet of 1/4" Maple Plywood*

Ultimate Rocking Horse

You're sure to light up a child's face when you present them with this amazing and whimsical rocking horse.

There's no children's toy more iconic than the wood rocking horse. It's the one toy that most children will remember well into their adulthood. I have great memories of the hours spent on my simple store-bought horse, pretending to ride the range and herd cattle. But our version here is nothing like what I had as a youngster.

DISTINCTIVE FEATURES. One of the first things you'll notice about this rocking horse is the unique rocking mechanism the horse body is mounted on. Instead of a couple of simple rockers, our horse sits atop an arched support that glides back-and-forth with the aid of a couple bent-steel rods. And all of this is fixed to a solid framework to provide exceptional strength and stability.

The other thing that stands out is the rugged beefiness of the horse's body. This rock-solid design will hold up to the roughest abuse your little cowboy or cowgirl can dish out.

WOODWORKING CHALLENGES. Building this rocking horse is sure to put your woodworking chops to the test. From bending thin strips of plywood to form the rocker arch, to creating the horse body and legs using large patterns, there's plenty to keep even the seasoned woodworker satisfied. But we'll break it all down in simple step-by-step fashion to make it easy to build for the novice, as well. So saddle up and get ready for some fun with this fantastic project!

Written by: Robert Kemp; Project Design: Chris Fitch

Construction Overview / OVERALL DIMENSIONS: 49"W x 37"H x 18½"D

A comfortable saddle with backstop keeps the rider from sliding off

Multiple strands of yarn are secured to the body to form the tail and mane

Realistic glass eyes offer a nice detail

Thick dowels are used for the foot rests and the handle

The rocker arch is made from several layers of plywood, bent to shape using a shop-built form

Bent steel rods secure the rocker arch to the base

Wedges glued to the sides of the legs and shaped by hand add another level of depth

Heavy-duty hardware ensures rock-solid dependability

Thick poplar stock creates a stable base and takes paint well

Mortise and tenon joinery is used to ensure a solid foundation

NOTE: Check out Sources on page 67 for all of the hardware and paint information

When shaped to blend with the legs and painted for contrast, the hooves take on a realistic appearance.

The rocker arch swings freely suspended by the two steel rods that are secured between the legs. Bending the rods to shape is easier than you think.

Illustrations: Harlan V. Clark

Start by BUILDING THE BASE

A rocking horse demands a sturdy base that won't tip or flex during use. And that's where our project begins. Here, four angled legs are connected to rails and stretchers using mortise and tenon joinery. This solid connection can take the abuse needed for a children's toy. But before you start doing any woodworking, there's a little bit of metalworking that needs to be completed.

ROCKER BARS & BRACKETS. As you can see in the illustration above, two steel rods are trapped between the legs and produce the rocking motion. Four smaller steel brackets provide reinforcement between the legs and stretchers.

Bending the two steel rods requires the application of a little heat at the

How-To: BEND THE STEEL RODS & BRACKETS

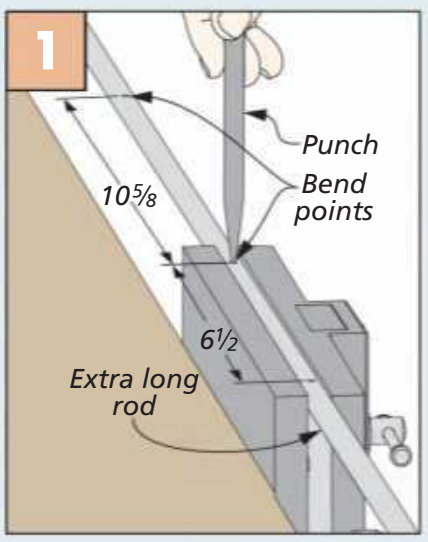

Mark the Bend Points. Use a punch to mark the bend points on the steel rods.

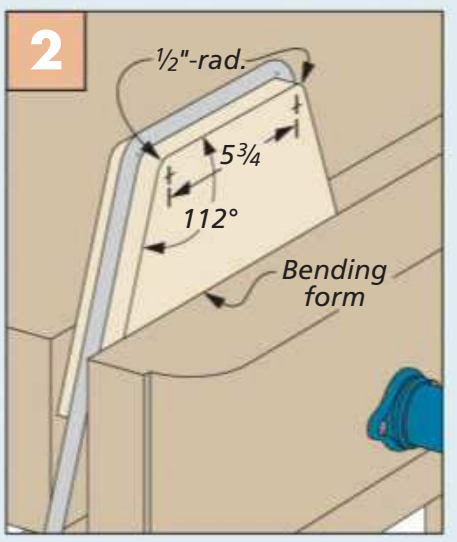

Bend Steel Rods. After heating the rod at the marks, bend it around the form.

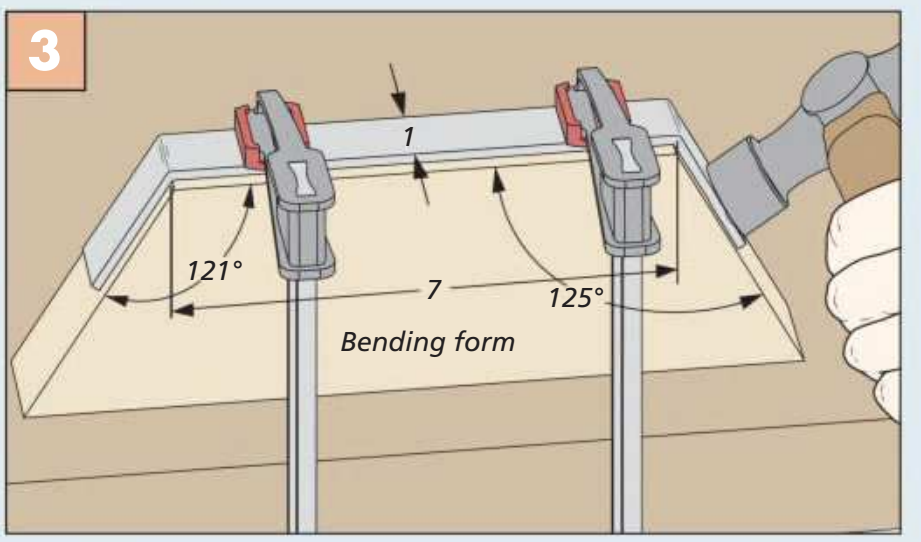

Bending the Steel Bars. Like the steel rods, you'll bend the steel bars around a form. But here, no heat is needed. Just use a hammer to get clean and crisp bends.

bend points to soften the steel. I marked the corners with a punch, as shown in Figure 1 on the previous page. The punch marks won't disappear when the rod is heated. A handheld propane torch works well to heat the steel and a simple wood form makes bending the rods to shape with a hammer a breeze (Figure 2). Be sure to wear thick leather gloves when handling the hot steel.

The thinner steel bars for the brackets are also bent to shape using a hammer, but no heat. I again used a form to create the angle to get a crisp, clean bend as shown in Figure 3. Now set the steel parts aside to work on the wood parts of the base.

MAKE THE BASE

The four sturdy legs are the place to start the woodworking portion of the base. The rails and stretchers follow in short order. But begin by cutting four rectangular blanks to size for the legs and use the pattern shown at right to lay out the shape, hole location, and mortises.

MORTISE & SHAPE. Each leg needs a mortise on the inside face (Figure 1 at right). A second mortise on the inside edge requires a wedge to get the correct angle, as shown in Figure 2. Clean up the mortise walls with a chisel, drill the hole near the top of each leg, and cut them to shape at the band saw.

RAILS & STRETCHERS. The two rails are pretty straightforward to make. The tenons on the ends can be knocked out quickly at the table saw (Figure 3).

The two stretchers are just slightly more complicated. They need a tenon on each end, as well. But here, the shoulders are angled to match the angle of the legs (detail 'c', previous page). Figures 4 and 5 show how I went about making these tenons. Be sure to ease the edges on all the workpieces and sand everything thoroughly before moving on.

ASSEMBLE THE BASE. To simplify the assembly process, I glued a rail between two legs first. You'll place one bent steel rod in the holes before clamping things tight. You can then add the stretchers to connect the two end assemblies. The steel brackets are fastened to the legs and stretchers with square-head lag screws.

How-To: SHAPE THE BASE PARTS

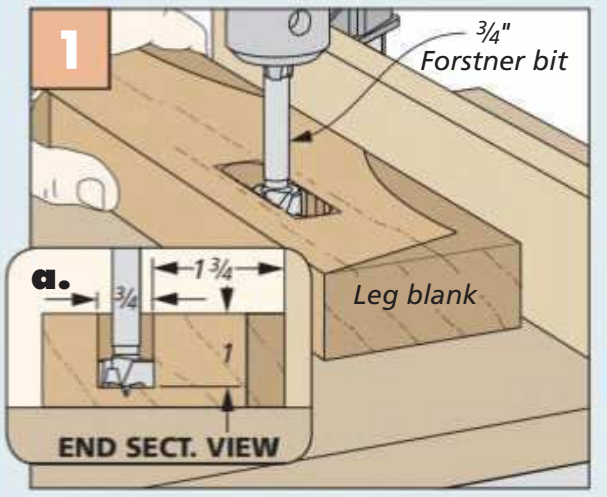

Side Mortise in Leg. Make the shallow mortise in the sides of the legs using the drill press and a chisel.

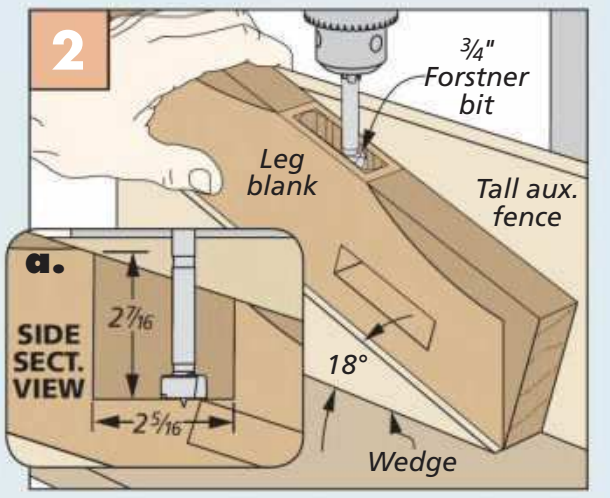

Edge Mortise. You'll need to make an 18° wedge to prop up the leg for making the mortise in the edge.

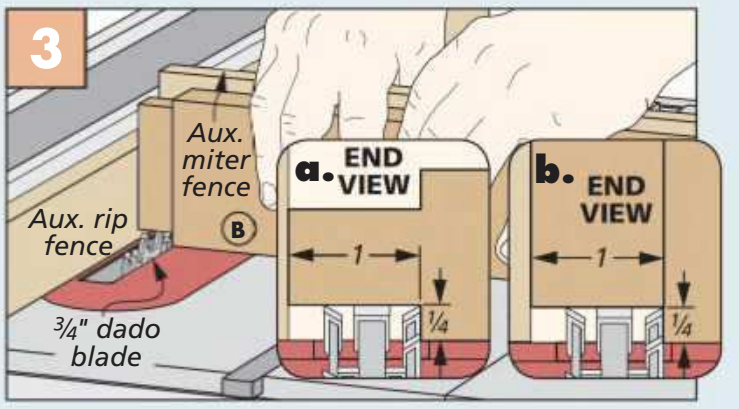

Tenons on Rails. The tenons on the ends of the rails are pretty straightforward to make using a dado blade in the table saw.

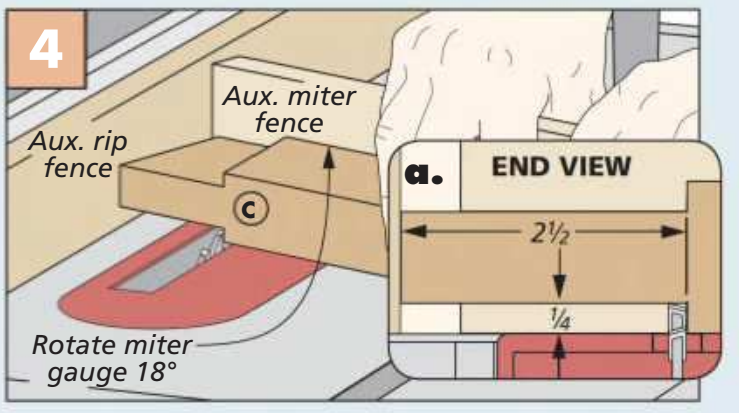

Tenons on Stretchers. For the stretchers, form the shoulders of the angled tenons on the wide face of the workpiece using a standard blade.

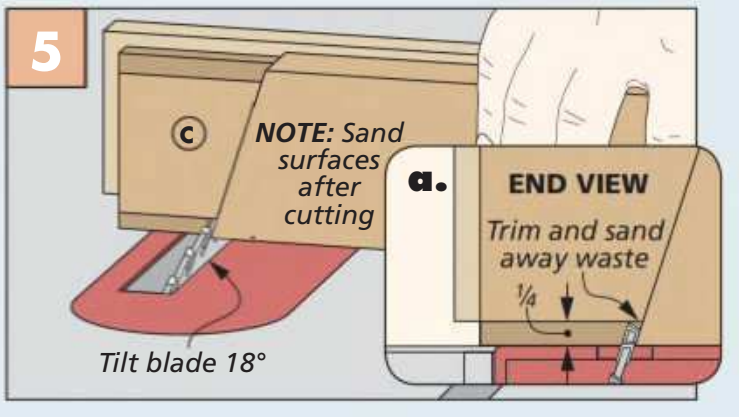

Angled Shoulders. Tilt the blade 18° to make the shoulder cuts on the edge of the piece, then nibble away the remaining waste.

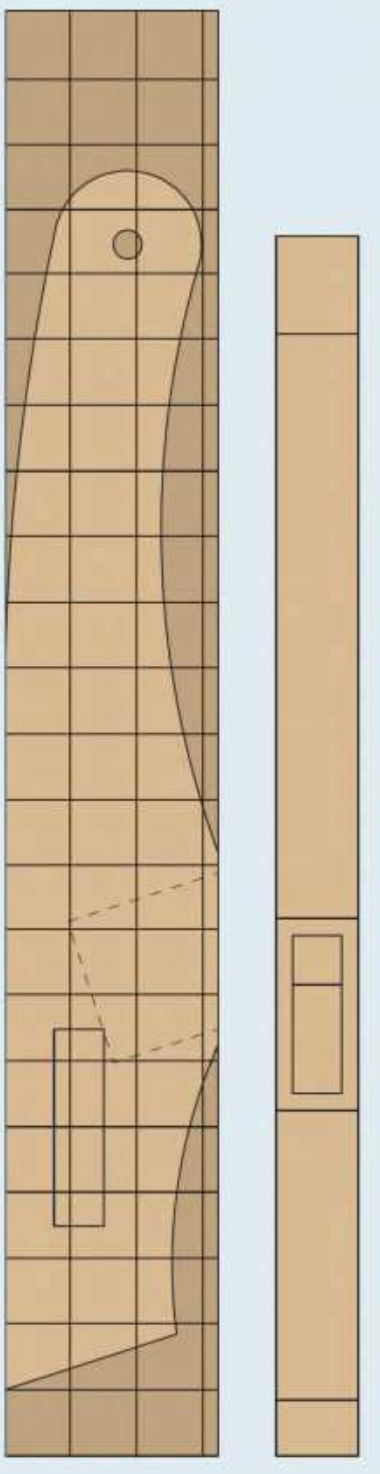

LEG PATTERN
1 square = 1"

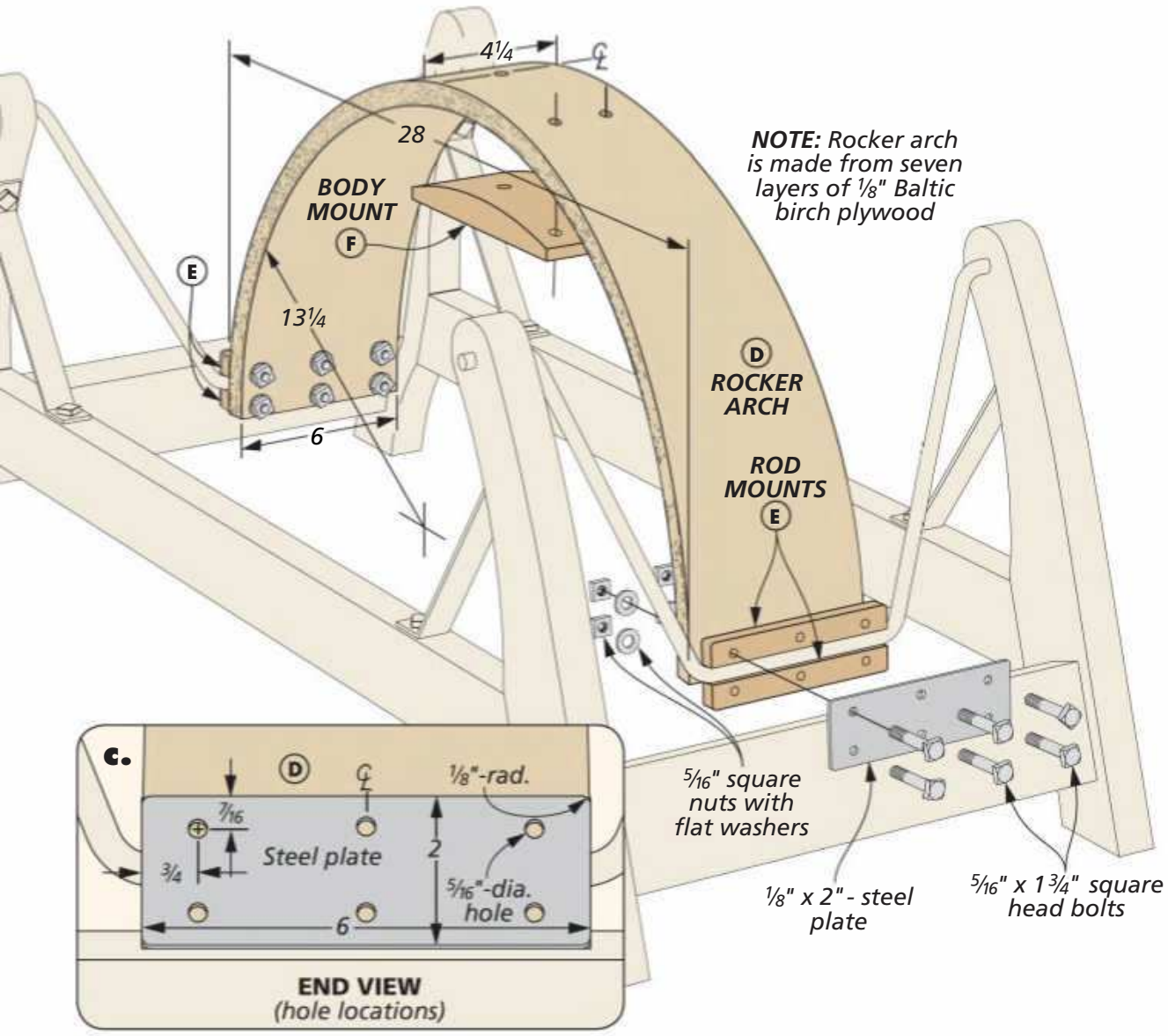

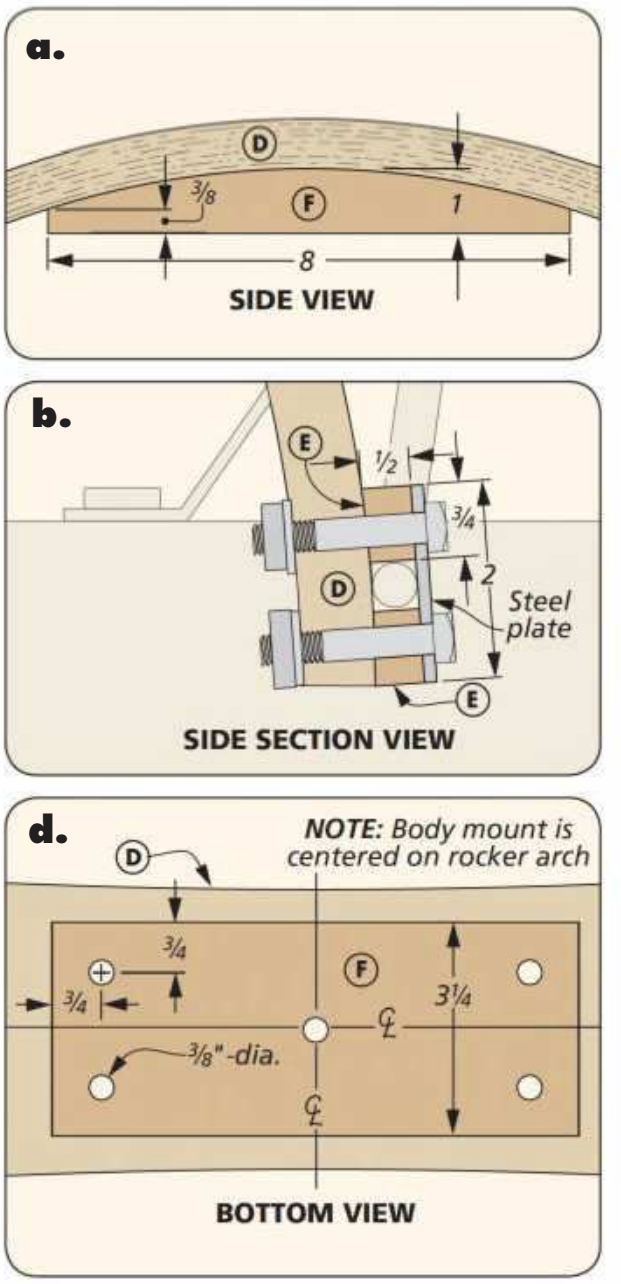

Add the ARCH & MOUNTS

With the base completed, you can now focus on one of the more interesting aspects of this project — the rocker arch. The arch is built from seven layers of ⅛" plywood that's wrapped around a thick MDF form during the glue up process. The ⅛" plywood is very flexible and holds its shape well when bent. Mounting blocks then provide a place to attach the horse body and tie the rocker arch to the steel rods in the base.

HEFTY FORM. There's nothing complicated about building the arch form. It's made from eight layers of MDF with a series of deep holes around the curved perimeter for clamp-head clearance. Figure 1 below provides all of the information you'll need to build it.

THIN PLYWOOD STRIPS. Next, I cut the seven plywood strips for the arch to size. Just a couple things to note here. First, I left

How-To: BUILD THE FORM & ORIENT THE PLYWOOD STRIPS

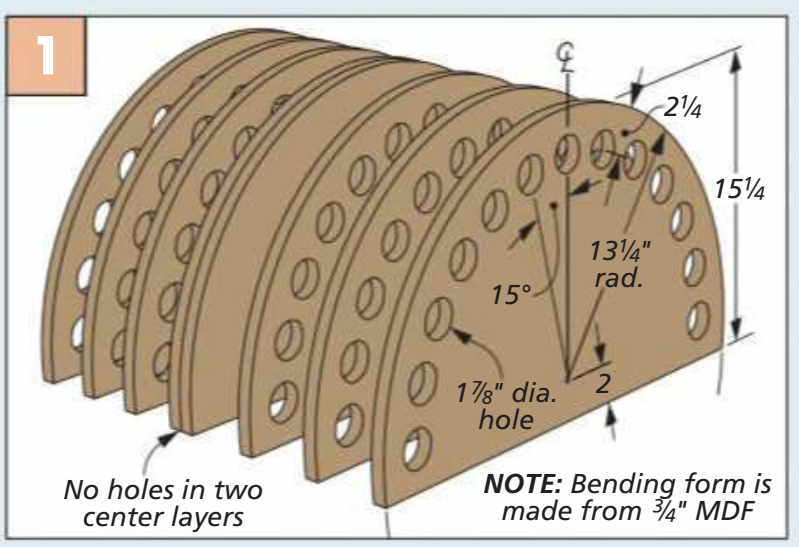

Bending Form. Creating the rocker arch requires a thick bending form to hold the plywood strips in place while the glue sets up.

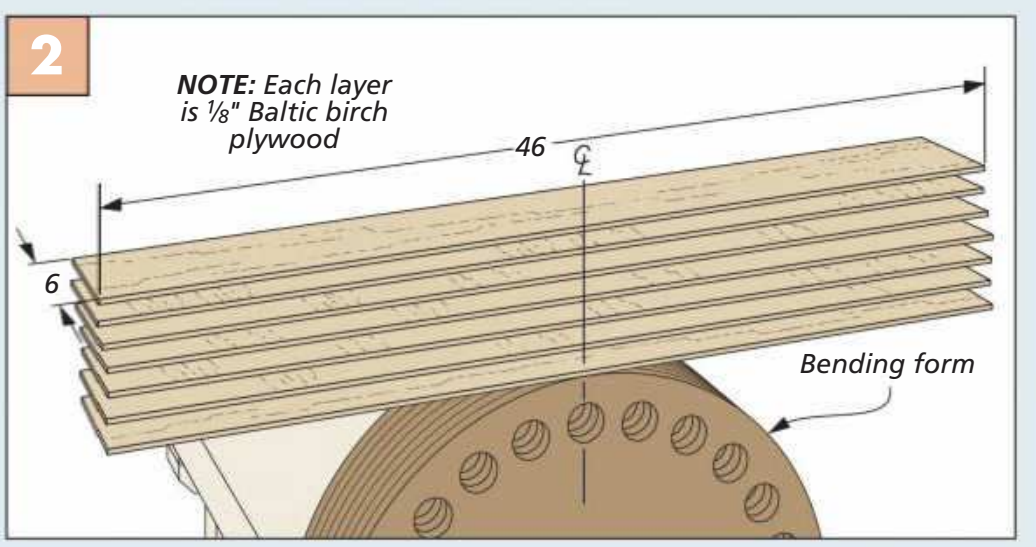

Seven Layers. The top and bottom plywood layers have the grain running the length of the workpiece. For maximum strength, the grain on the five middle layers runs from side-to-side.

the strips long for now. They'll be cut to final length after they're glued up. And second, I cut the two outer strips with the grain running the length of each piece. The five layers in the middle have the grain oriented from side-to-side. This provides maximum strength when the pieces are assembled. Figure 2 at the bottom of the previous page shows how the strips are positioned.

LAY OUT CURVES. One other thing needs to be done before getting out the glue. And that's to lay out the gentle curve on one face of a long-grain plywood strip (Figure 1, at right). This strip will be the first one placed on the bending form with the layout marks face down so the layout line is visible after assembly.

ASSEMBLY PROCESS. Gluing the strips together around the form is actually quite easy. But keep a couple of things in mind to help the process go smoothly. First, be sure to use a slow-set glue. That'll give you plenty of time to get everything lined up and clamped around the form.

Second, I laid all of the strips on my bench, side by side, and used a roller to spread the glue quickly. It's then a matter of stacking the strips, and starting in the center, clamp the strips around the form, as shown in Figure 2.

SIZE & CUT CURVE. When the glue is dry and the arch is removed from the form, cut the ends to length (Figure 3). Use the 28" dimension shown in the main illustration on the previous page to establish the end lines of the arch.

At the band saw, cut the long curves along the edges, rotating the arch through the blade, as shown in Figure 4. Spend some time sanding the edges smooth before moving on.

FINAL ROCKER DETAILS. The last three figures at right show what's left to complete the rocker arch parts. This includes cutting the thick blank to size for the body mount and drilling the five holes (detail 'd,' previous page) before cutting the curve on the top face (Figure 5).

Then use the completed workpiece to locate and drill the holes in the arch, as shown in Figure 6. Finally, cut the four rod mounts to size, as well as the steel plates. Glue the mounts to the arch before attaching the plates (Figure 7).

How-To: COMPLETE THE ROCKER ARCH

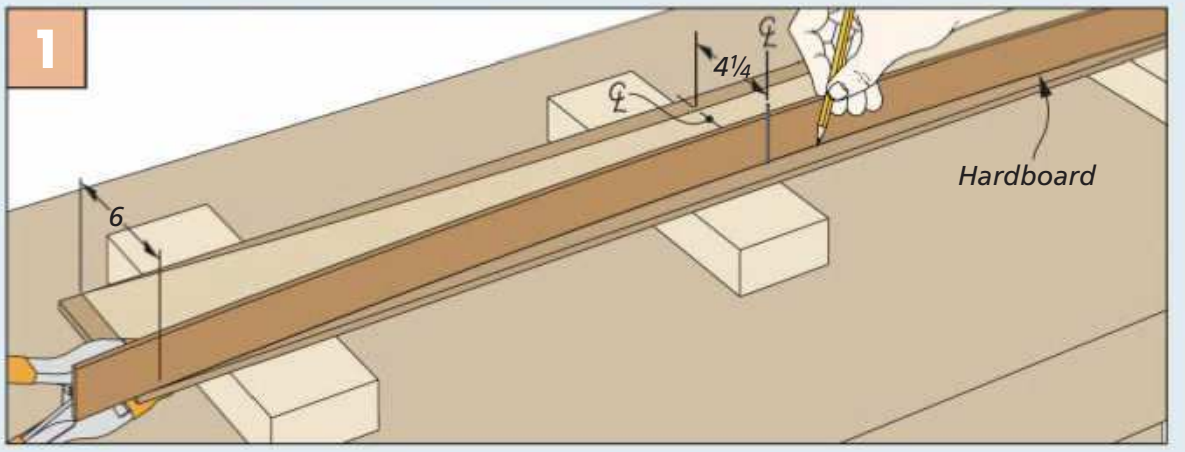

Lay Out the Curve. The rocker arch has a gentle curve along each edge. I used a flexible strip of hardboard as a straightedge to draw this curve on one of the long-grain strips. It's much easier to do this now before bending the pieces.

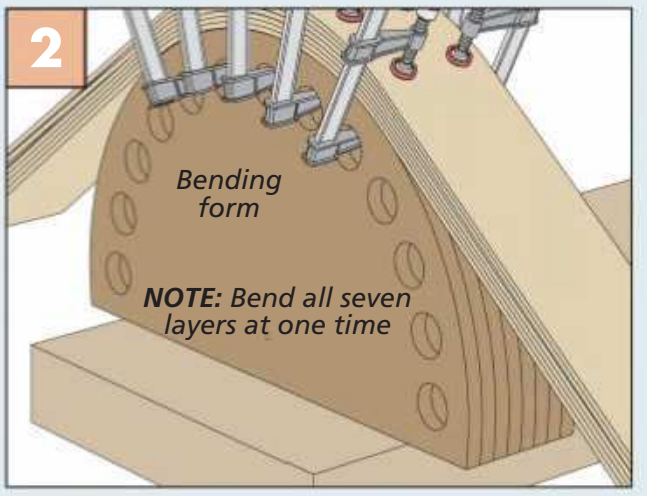

Clamp It Up. Apply glue to all of the strips and, starting in the middle, place clamps around the form to draw things tight.

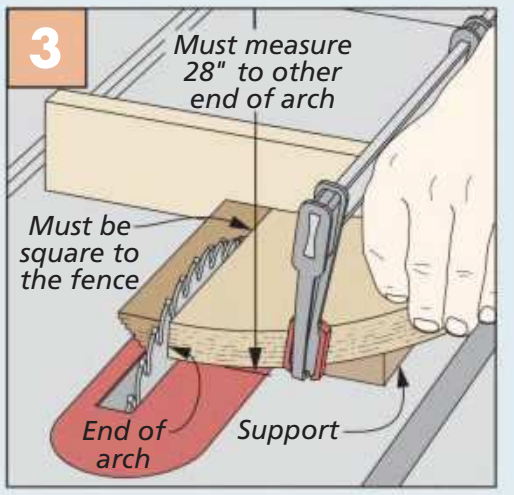

Square the Ends. After the glue dries, clamp the arch to the miter gauge to square the ends.

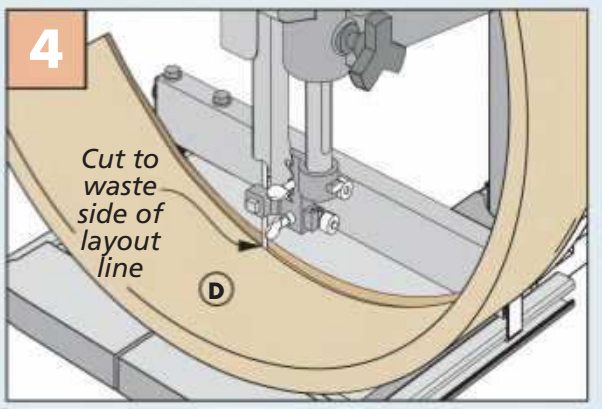

Cutting the Curves. Rotate the arch through the band saw blade to cut both sides of the curve, then sand it smooth.

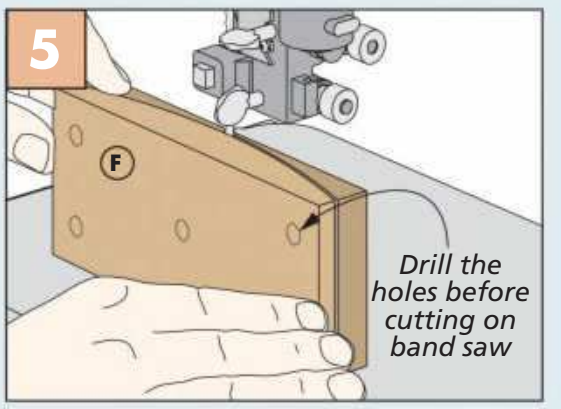

Body Mount. Trace the curve from the arch to the body mount and cut it at the band saw, as well.

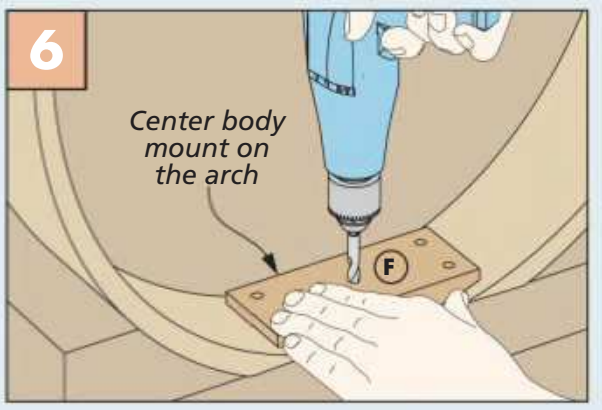

Transfer Holes. Use the body mount as a guide to drill the five holes in the rocker arch, but don't attach it yet.

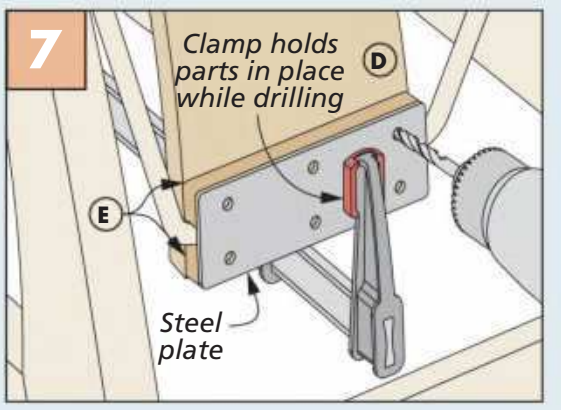

Assembly. Drill the holes in the steel plates and then use them to locate and drill the holes in the rod mounts.

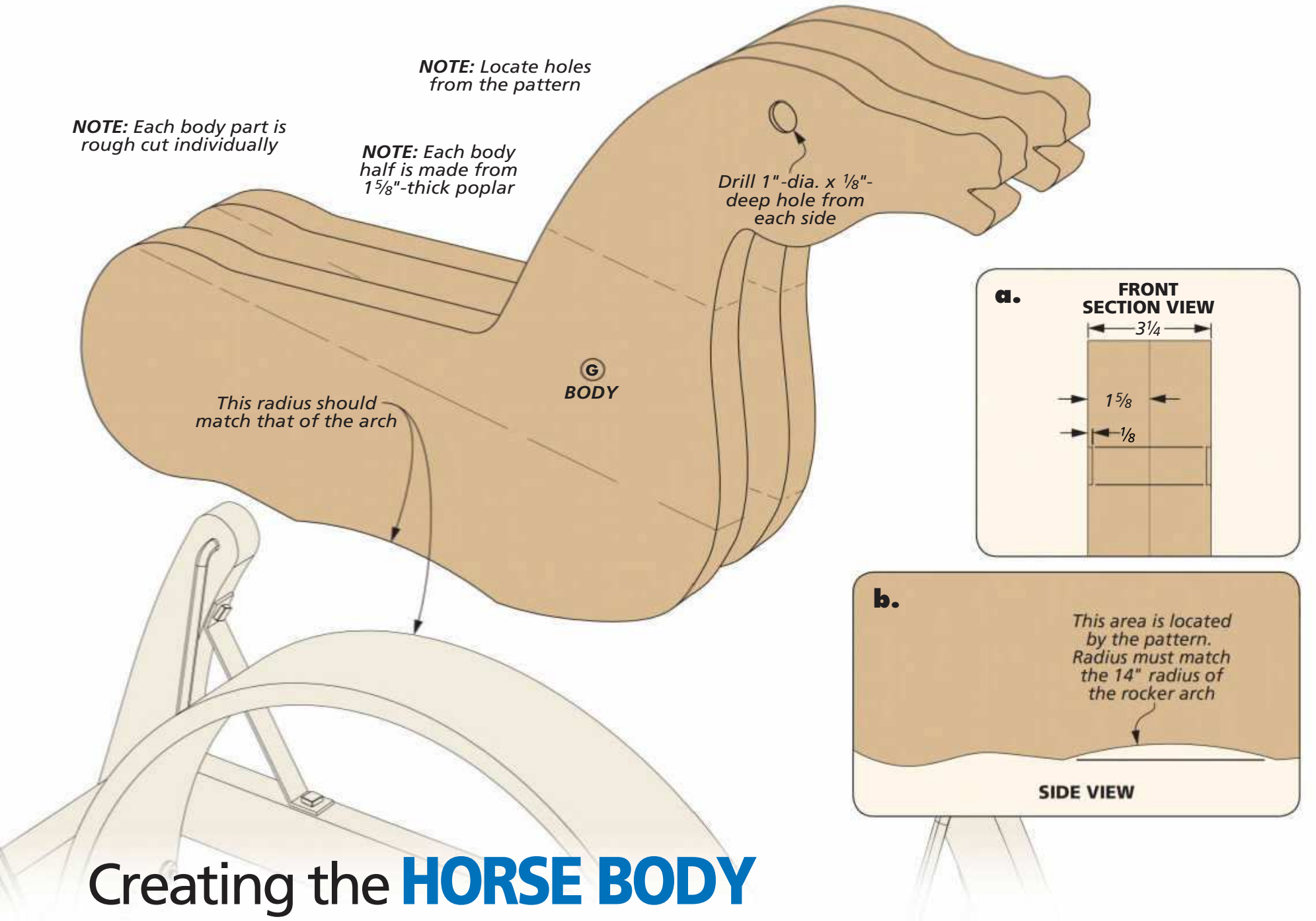

Creating the **HORSE BODY**

You should now have a completed base with a smooth rocking arch attached to the bent steel rods. Making the body of the horse is next on the agenda. Adding the body starts to give the project an identifiable shape.

THICK SLABS. The body is made from two thick slabs. Each one is glued up from several boards so that it's wide enough to apply the pattern shown below. A full-size pattern can also be downloaded at *Woodsmith.com*. Go ahead and glue up the stock at this point for each half of the horse body.

SHAPING TIPS. Before jumping right into cutting the body to shape, let me mention a few things that'll be beneficial down the road. First, while you'll be

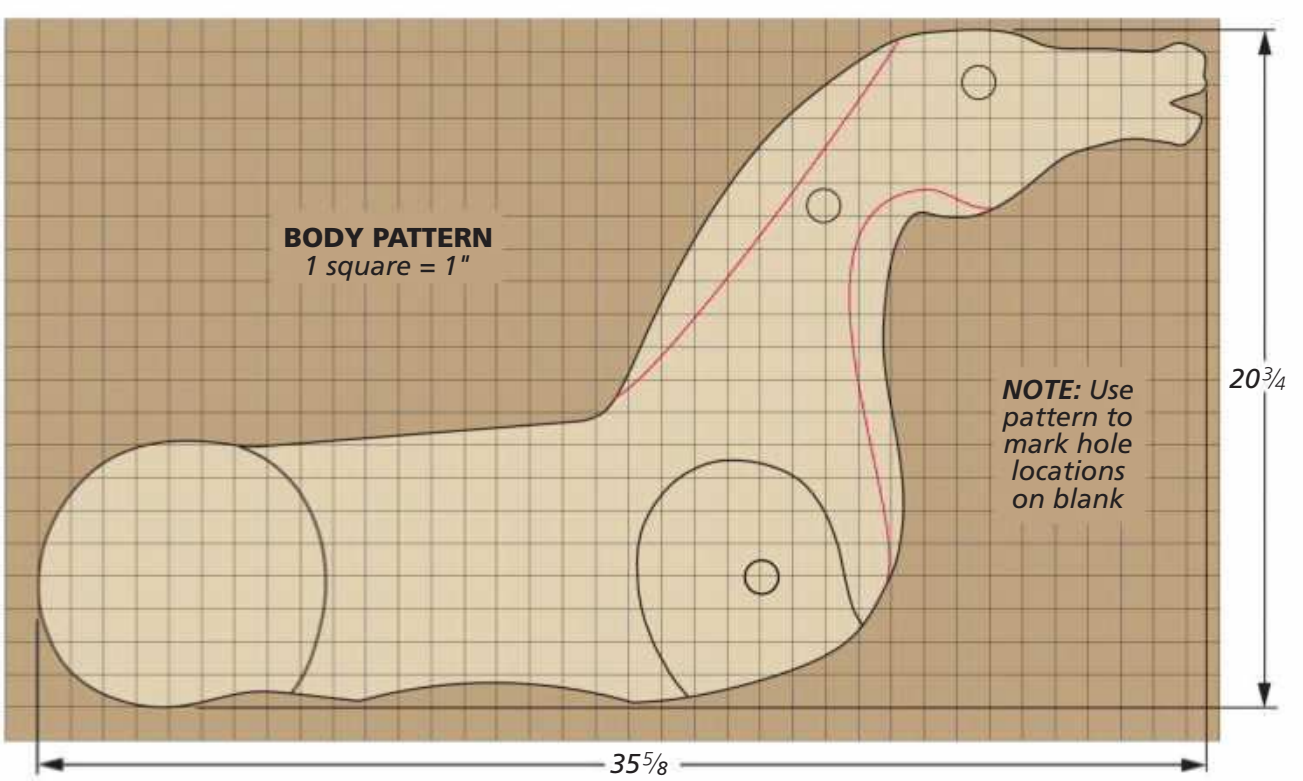

SCALE: 1 SQUARE = 1"

cutting the horse body to rough shape using power tools (I used a band saw and router), there are several areas that need some hand work to achieve the desired look. The pattern shown at the bottom of the previous page shows these areas. Most of this work can be done with rasps, files, and sandpaper.

That leads me to the second point — you'll want to wait to do most of this hand-forming work until after the legs and saddle have been added later on. Those parts require a bit of hand-forming work, as well. Waiting until after assembly avoids creating any gaps where these parts intersect and lets you shape the parts at the same time to better blend the curves.

And finally, how much forming you do on the body, legs, and saddle is up to you. You could opt to just round the edges with a router and call it good. But the more forming you do, the more life-like the horse will look.

ONE HALF AT A TIME. Because each of the horse body slabs is relatively heavy, I decided to cut them out one at a time on the band saw, as shown in Figure 1 at right. I stayed about ¼" to the waste side of the pattern for now.

GLUE UP HALVES. After getting rid of a large chunk of the waste material, the halves will be much lighter and easier to handle. Now, go ahead and glue them together (Figure 2). It's not critical if they're not perfectly aligned since there's still more material to remove around the edge.

Head back to the band saw to cut away this remaining material, as shown in Figure 3. It's not really necessary to sand the edges yet. You can do that work later when it's time to round, soften, and form the edges.

EYE HOLES. To add even more "realism" to the horse, I added glass eyes to the face. Sources on page 67 provides the information on where these can be found. So, before moving on, I drilled a shallow hole on either side of the head to recess the eyes just a bit (Figure 4). Be sure to check the fit of the eyes in the holes, but don't permanently fasten them in place now. You'll do that after painting or finishing are complete. But first, flip the page to work on the legs.

How-To: MAKE THE BODY

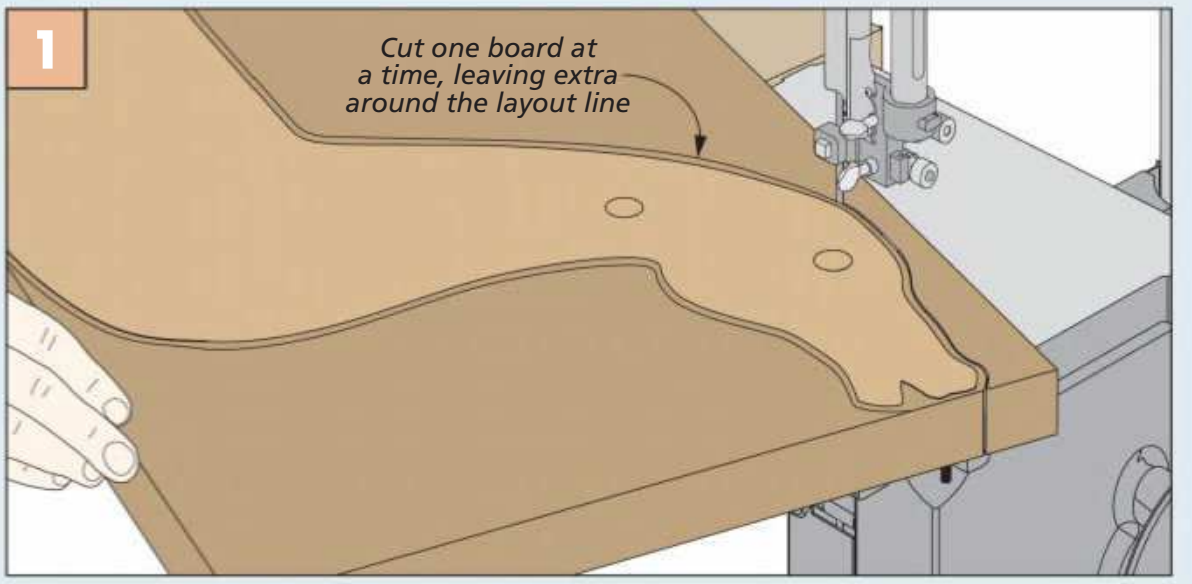

Cut Out the Body. Remove the bulk of the waste for each half of the body before gluing them together. Be sure to stay about ¼" outside of the layout lines for now. You'll remove the rest of the waste after gluing up the halves.

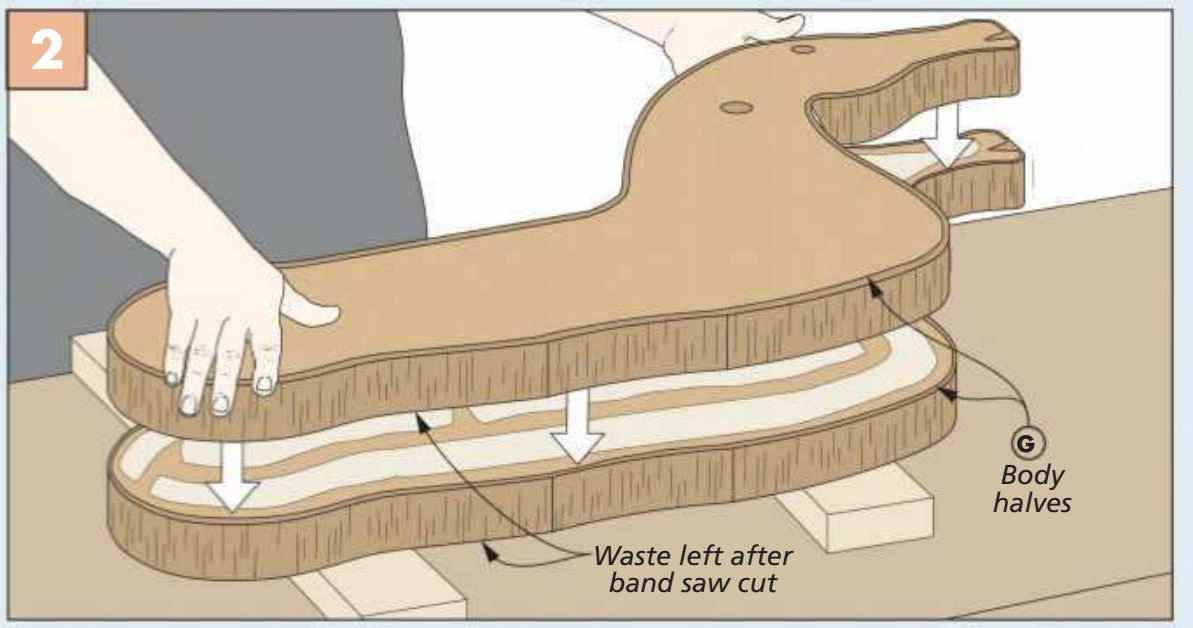

Glue the Body Halves Together. Spread a liberal amount of glue on the body halves and clamp them together. The extra waste material left around the edges gives you a little wiggle room.

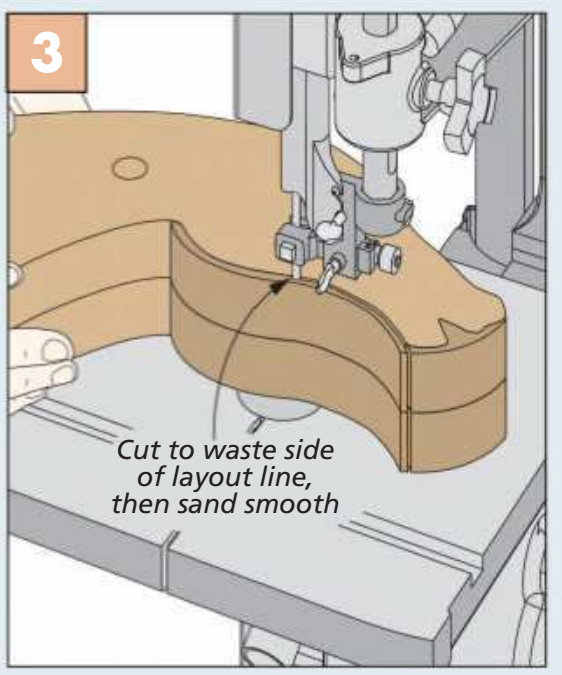

Finish Cuts. Go back to the band saw to remove the rest of the waste around the body.

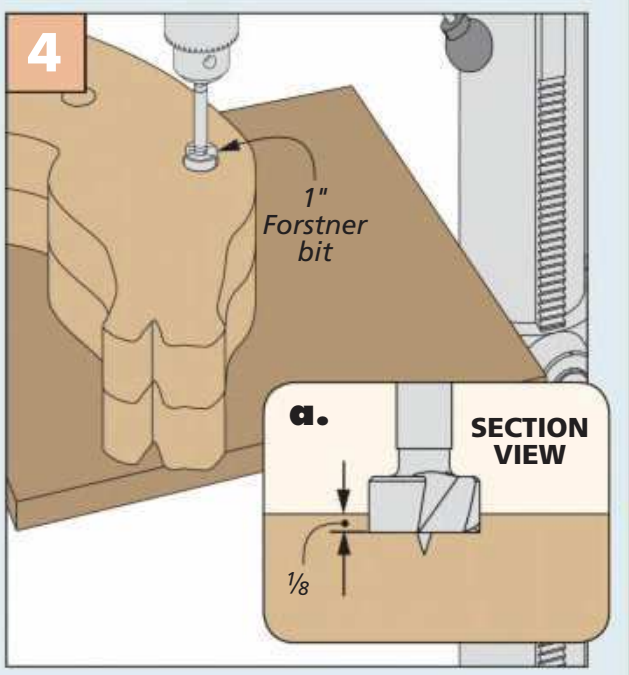

Drill Eye Holes. The glass eyes are recessed in a pair of shallow holes on either side of the head.

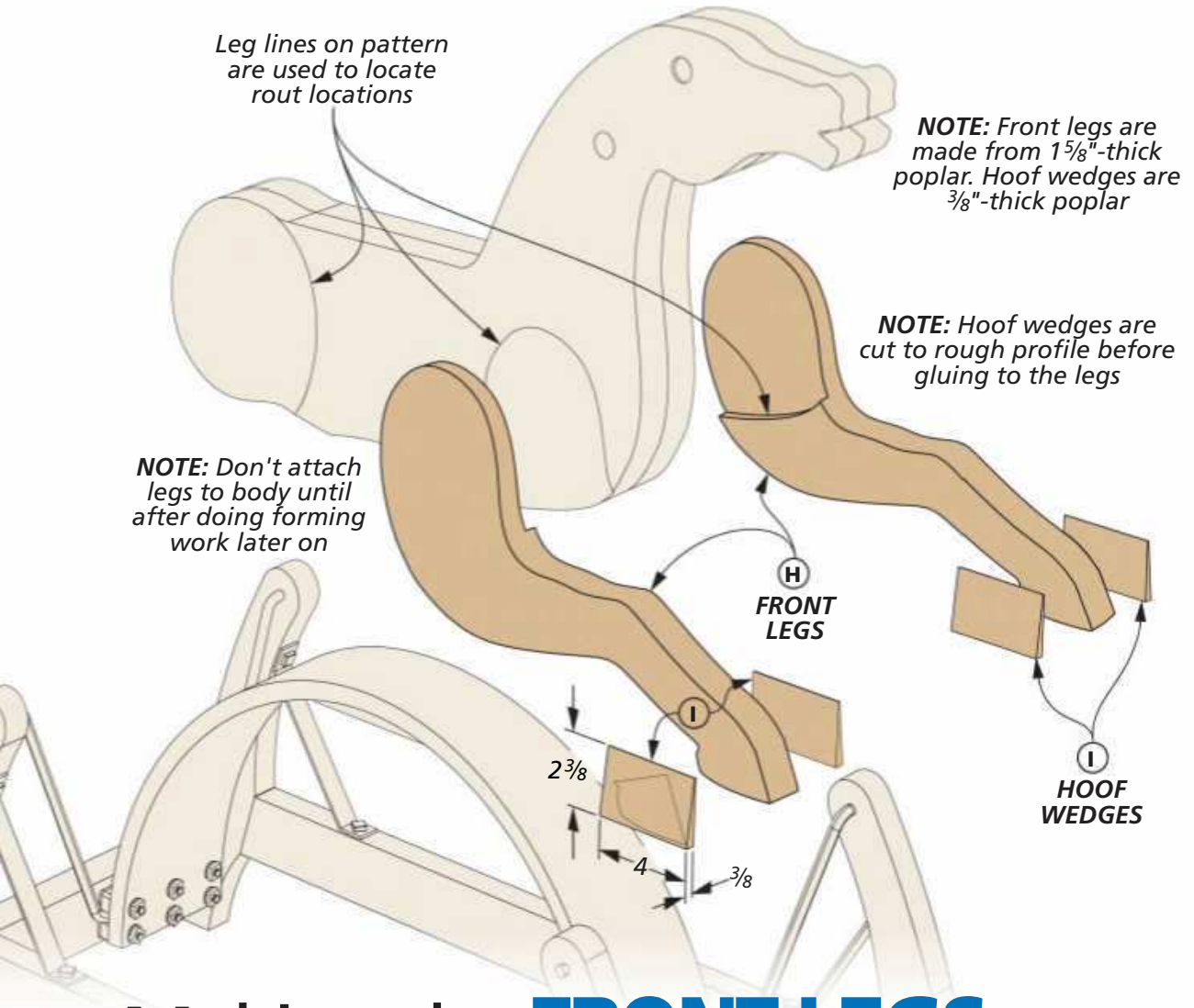

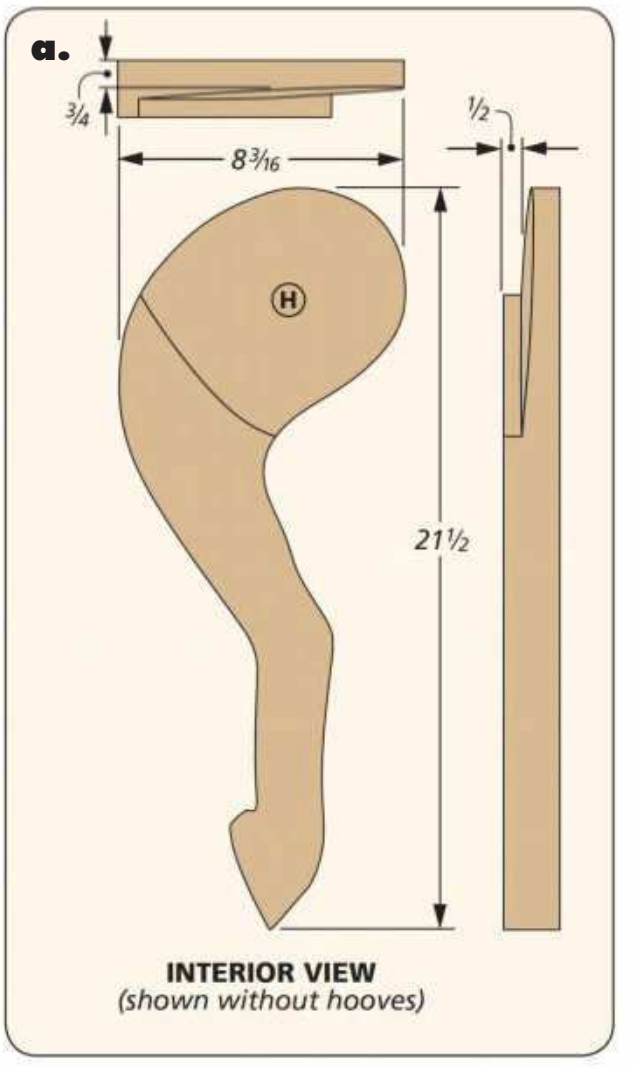

Making the FRONT LEGS

At this point, it's tempting to transfer the holes in the rocker arch to the underside of the horse's body and fasten the parts together to admire your progress. But I would recommend just doing a test fit for right now. It'll be much easier to position the body on the arch once the legs are installed.

And speaking of the legs, that's the next thing to conquer. Like the body, the legs are made from thick blanks of poplar and are cut to shape at the band saw using a pattern as a guide. The pattern for the front legs can be found in the right margin on the next page. (It's also available online.)

DETAILS. To make the horse as realistic-looking as possible, the legs are splayed out instead of simply being attached parallel to the body. To achieve this look, a tapered half-lap joint is created on the back face of each leg using a simple to build platform and router bridge shown in the drawings below.

One last detail on the legs to add to the authenticity are two thin wedges at the bottom to widen the hooves (illustration above). You can cut them to size, but hold off on attaching them just yet. I'll explain the forming process in more detail later on when making the back legs.

START WITH THE FRONT LEGS. As you did before with the horse's body, you'll need to glue up enough stock to create a blank wide enough to accommodate the front leg pattern. Simply apply the

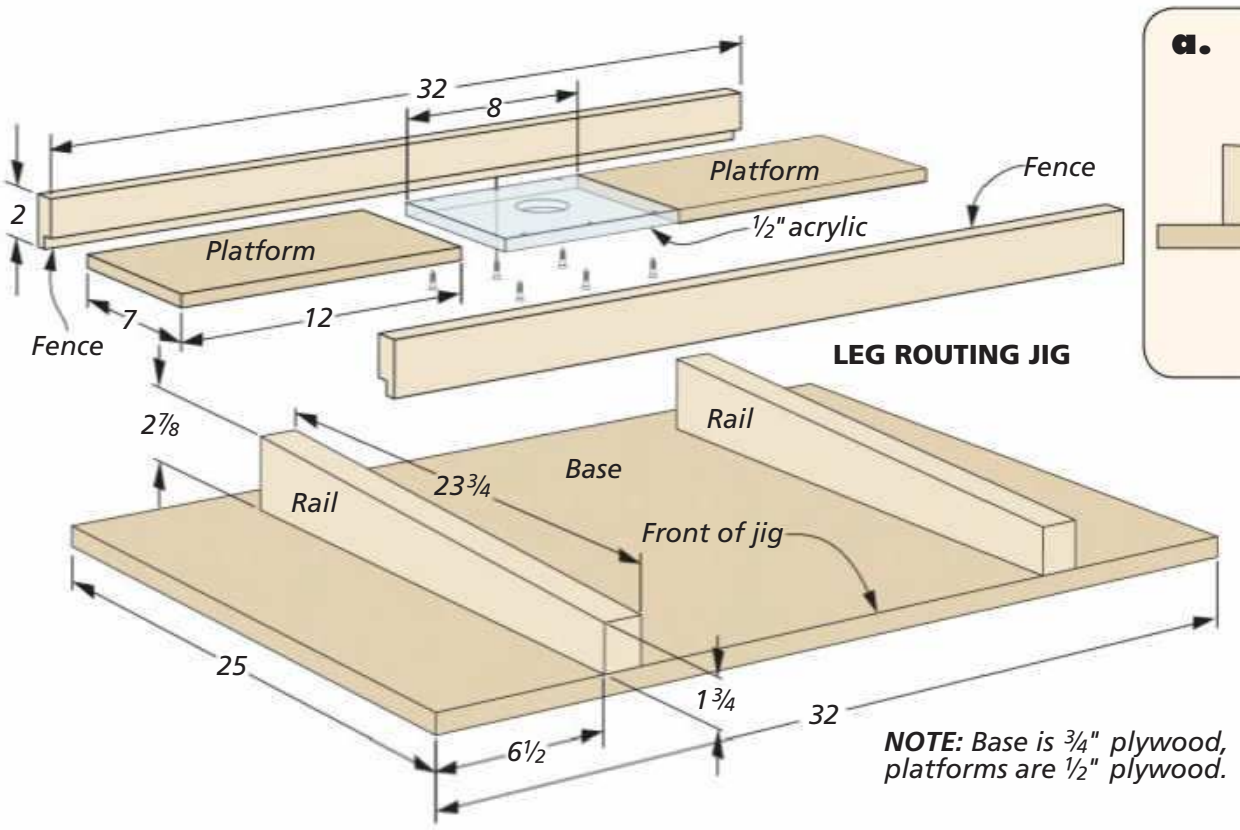

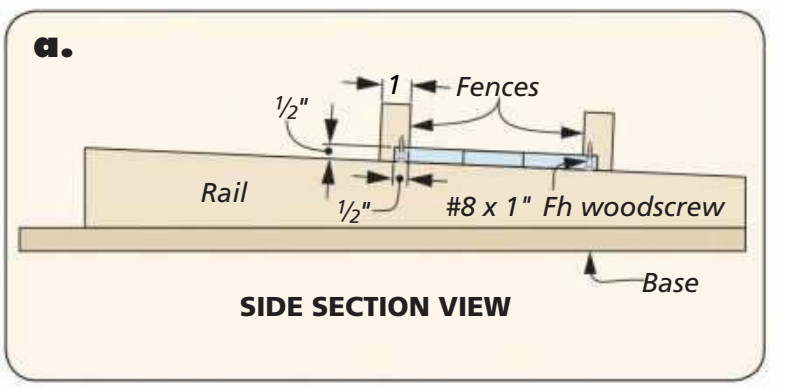

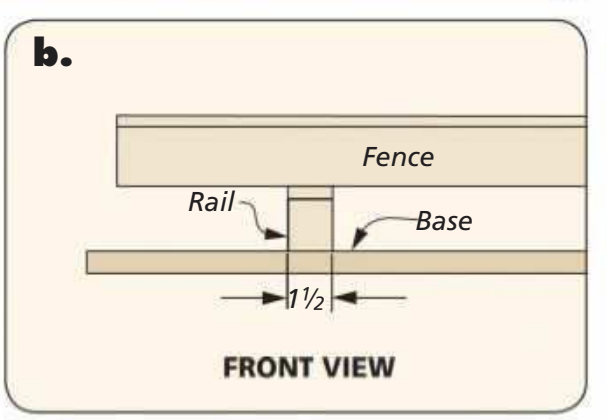

pattern to the blank and cut it to shape at the band saw (Figure 1 at right). You can sand the edges of the legs smooth but hold off on rounding over the edges for now.

LOCATE THE LEGS. Next, you'll need to position the leg on the body to mark the curved line on the leg where the two parts meet. Figure 2 shows what I mean. The pattern shown at right has a line that can be used as a general guide, but may not match the exact shape of your horse body. So once it's in position, flip the whole thing over and trace the line onto the backside of the leg (Figure 3).

After marking this line on one leg, it's a good idea to add the other front leg so that it's positioned at the same angle as the first leg and mark the line. This provides the best appearance and makes the horse look like it's in a full gallop.

BUILD THE JIGS. To recess the legs against the horse body requires a tapered half-lap joint at the top of the leg above the curved line you just marked. As I mentioned earlier, I did this through the use of the platform and router bridge shown at the bottom of the previous page.

The platform base is straightforward to make. It's just a piece of plywood with two hardwood rails that are tapered on the top edge. The router bridge rides on these tapered surfaces to rout the back of the legs.

For the bridge, you could simply mount your router to a long strip of plywood or hardwood. You would then use that to ride on the platform rails to rout the tapered half-lap joint. However, I decided to use the router bridge that we featured in *Woodsmith* No. 237. It's a great accessory to add to your router to increase the usefulness of this tool.

CREATE THE TAPERED HALF-LAPS. With the platform and bridge built, use double-sided tape to fasten one of the legs to the platform, positioned as shown in Figure 4. Now, with a straight bit in your router, slowly follow the layout line you marked on the leg for the first pass. As you move up the leg removing material, the taper is created (detail 'a' at right).

How-To: SHAPE THE FRONT LEGS

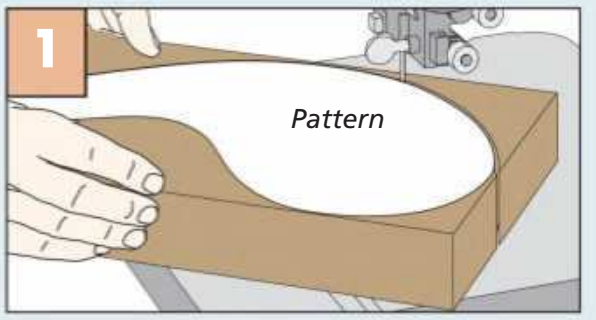

Cut Front Legs. At the band saw, cut the two front legs to size using the pattern as a guide.

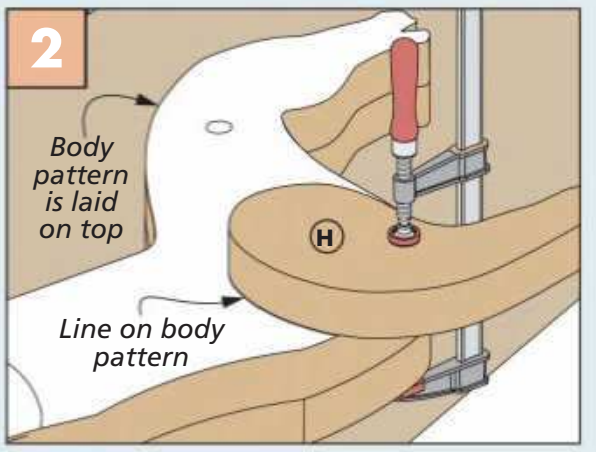

Positioning Front Legs. Clamp one of the legs to the body. Use the line on the pattern to get it close.

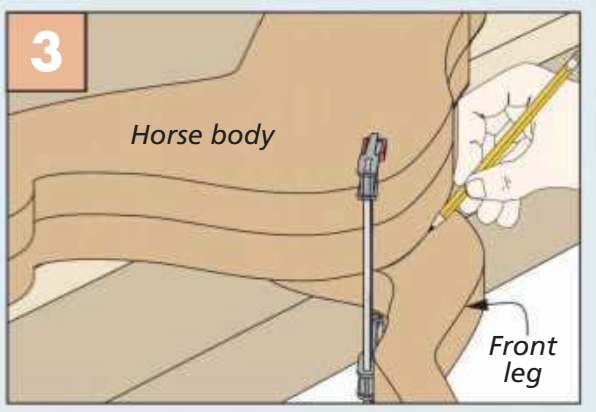

Tracing Layout Line. When you're satisfied with the position, flip the assembly over and mark the line.

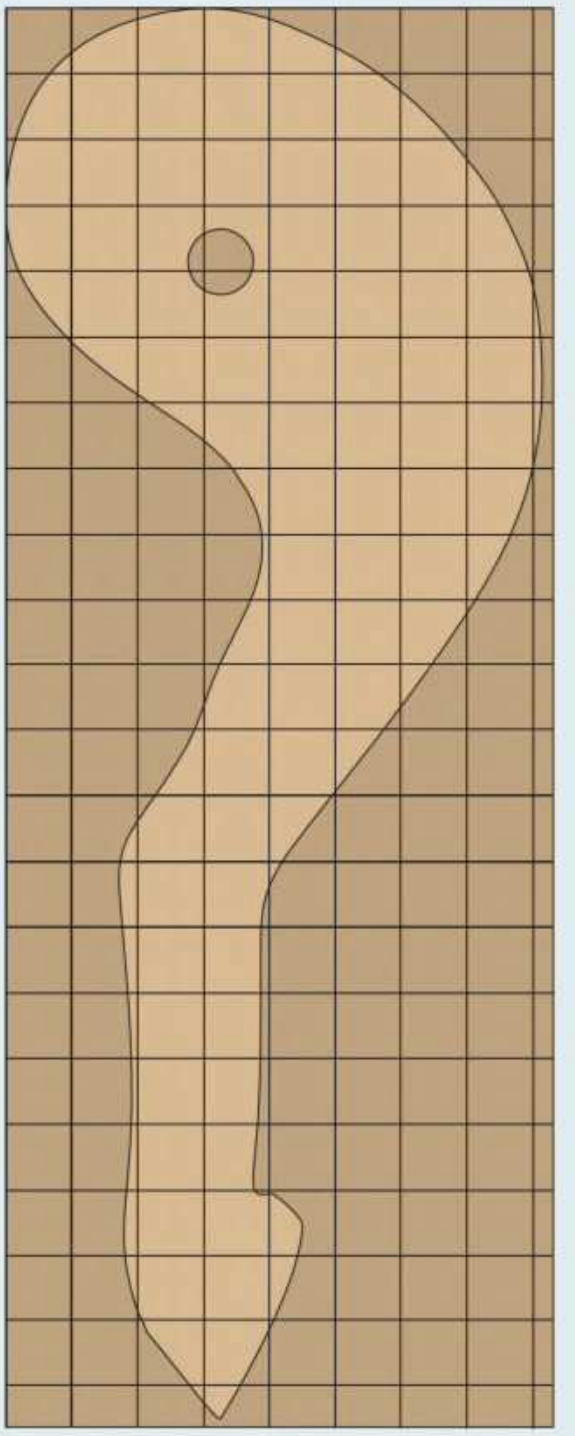

FRONT LEG
(interior)
Scale: 1 square = 1"

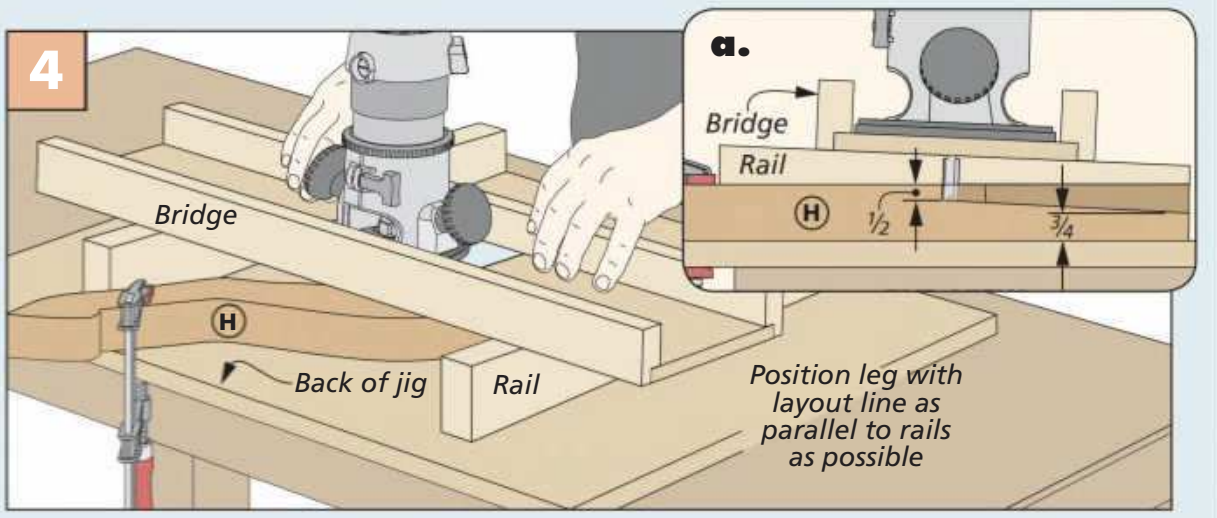

Routing the Half-Lap Joint. Position one of the legs on the sled as shown above. Then, using a straight bit in the router, start at the layout line and remove the material. Move down the rails towards the top of the leg as you go.

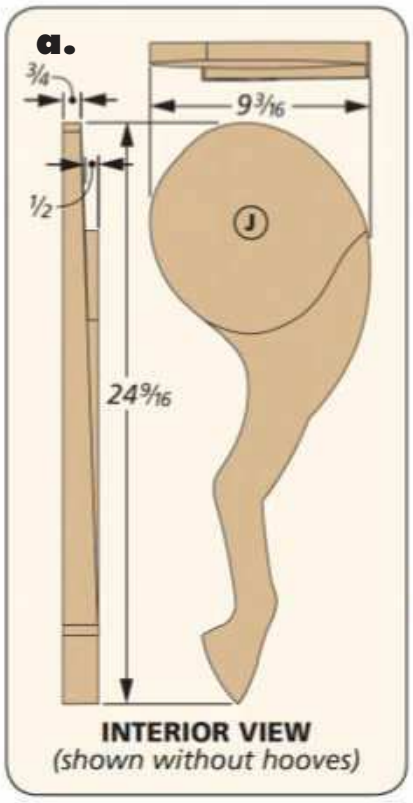

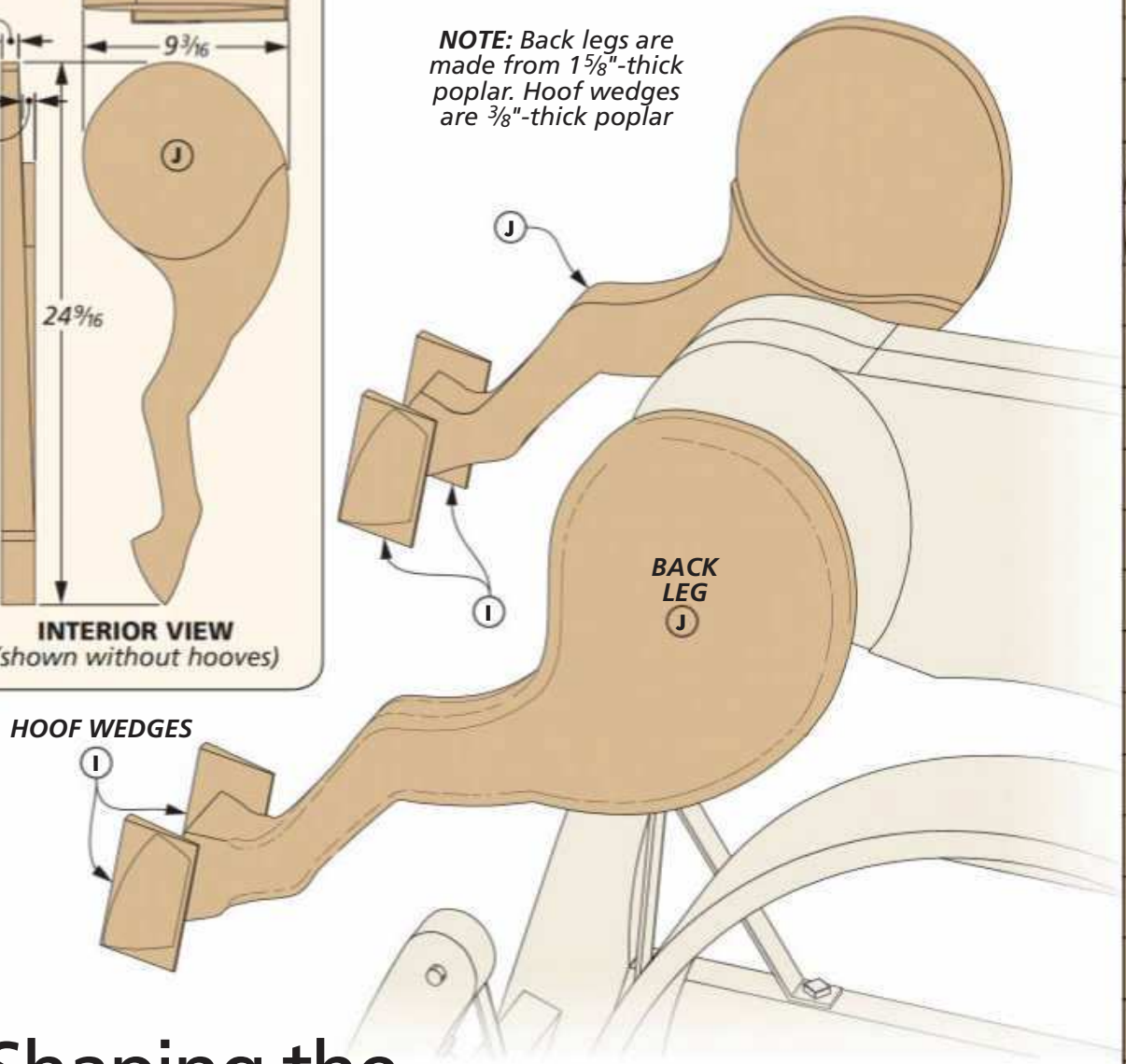

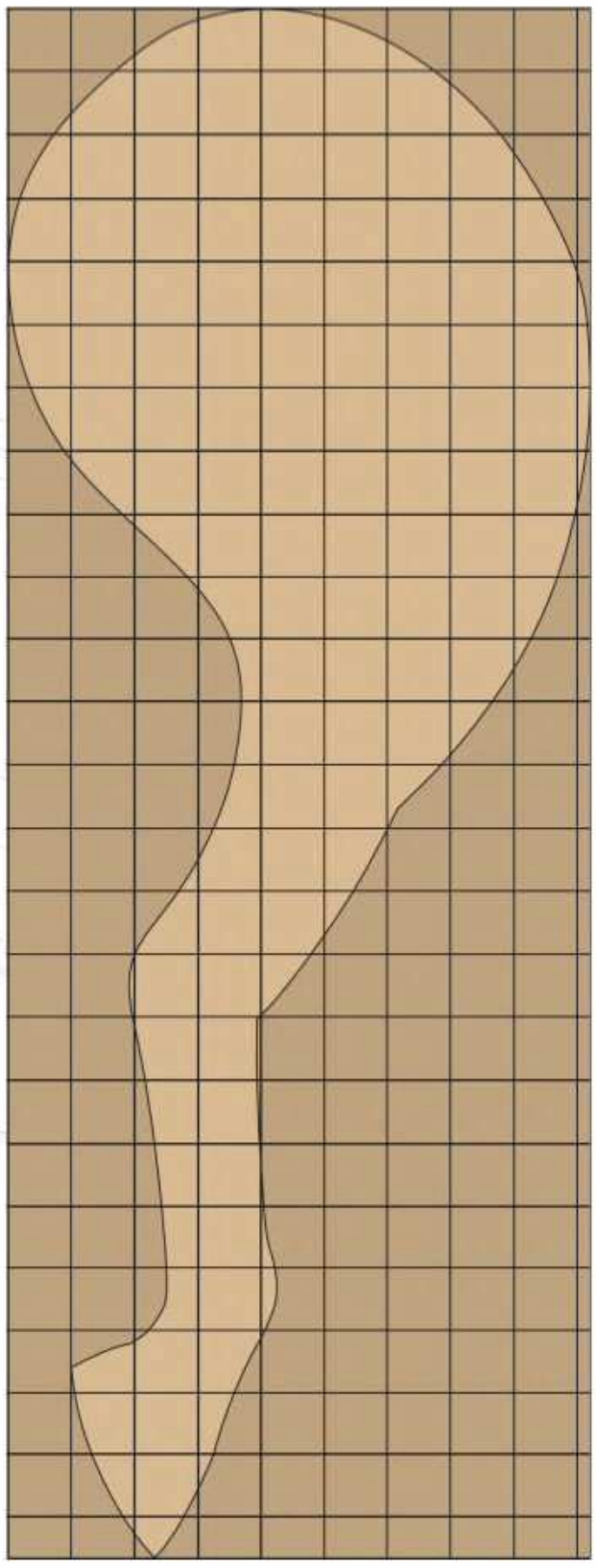

BACK LEG
Scale: 1 square = 1"

Shaping the **BACK LEGS & SADDLE**

With the front legs in hand, creating the back legs is a breeze. When they're complete, you'll be able to do some preliminary forming with hand tools. After that, you'll build a saddle for your little cowpoke.

FAMILIAR TERRITORY. Use the pattern at right as a guide and use the platform and router bridge you built for the front legs to create the tapered half-lap joint. After sanding the edges, I used a roundover bit in the router

How-To: SHAPE THE BACK LEG & HOOF

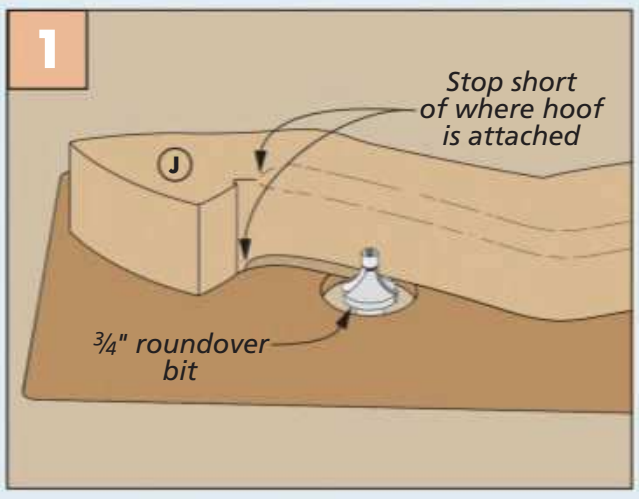

Roundover the Leg. Use a roundover bit to ease the edges of the legs. Be mindful of the edges that remain square.

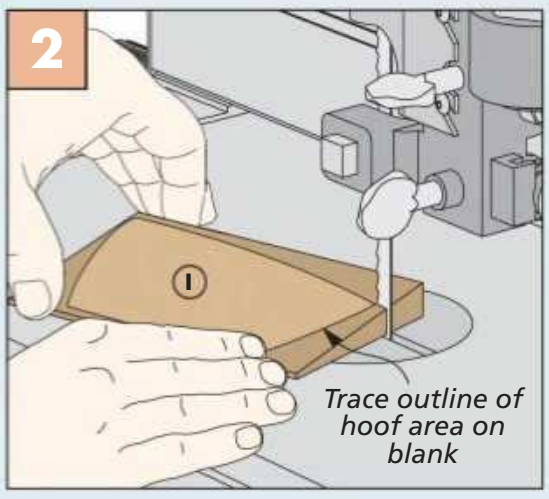

Cut Out the Hoof. Cut the hoof to shape at the band saw. Leave a little waste around the edges for shaping.

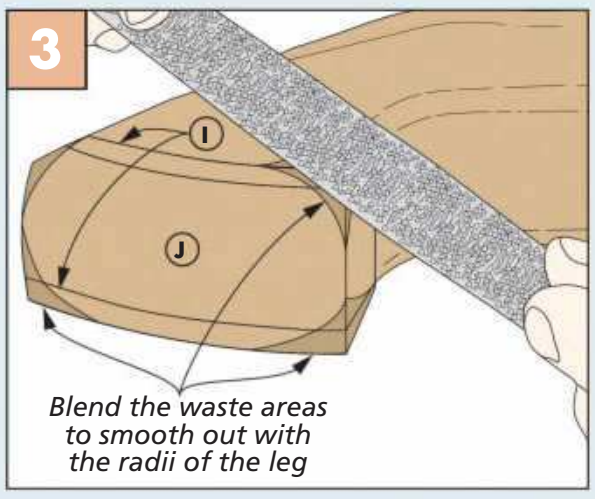

Hoof Shaping. Use a rasp, file, and sandpaper to complete the forming of the hoof and leg.

table to ease some of the edges on the legs. Be sure to stop short of the area where the hooves are attached, as shown in Figure 1 on the previous page. Also, around the top edge you'll only round over the outside of the legs. You don't want any gaps where the half-lap joint attaches to the body.

Next, I cut the hoof wedges to size (Figure 2). After gluing them in place, I pulled out my rasps and files to blend the wedges to the legs, as shown in Figure 3. The photo at the bottom of page 41 shows the look you're after.

There's still one more thing to do to the front legs before gluing them to the body — the hand forming work. You'll get to that shortly. But for now, set the legs aside and turn your focus to building the saddle.

SADDLE

The saddle consists of four parts — the top, a pair of sides, and backstop. I cut all of the parts to size before gluing them in place on the body.

CUT OUT THE PARTS. The How-To box at right shows the process for making the saddle parts. I began by gluing up enough stock to transfer the shape of the two sides to a blank (detail 'b'). The band saw makes quick work of cutting the sides to shape, as shown in Figure 1 at right.

After a light sanding, head over to the router table to ease the outside edges of the two sides (Figure 2). Like the top of the legs, you'll want to leave the top edge and the inside edges square for a gap-free fit against the saddle top and the body.

The saddle top is simply a rectangle with the top edges rounded over. When these three parts are done, go ahead and glue them in place on the body.

The backstop keeps the rider from sliding off the back of the seat. Since it's pretty small, I started with an oversize blank to rip the tapers along the edges. Figure 3 shows this process. With that done, bevel the ends to bring the part to final size (Figure 4).

Before gluing it in position on the saddle top, round over the top edges and the corners to avoid snagging clothing. The illustration and detail 'a' above show where to position the backstop.

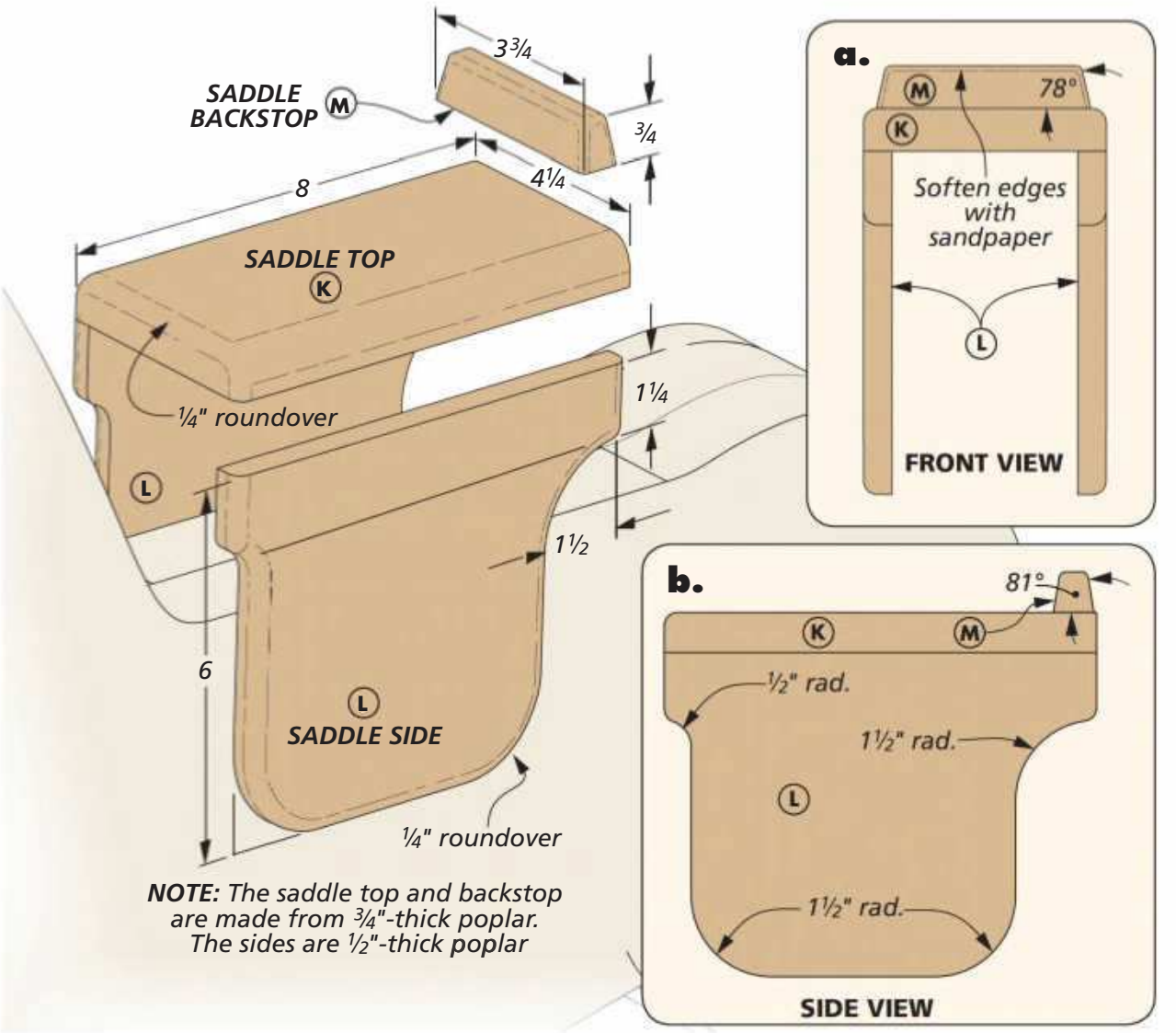

How-To: FORM THE SADDLE

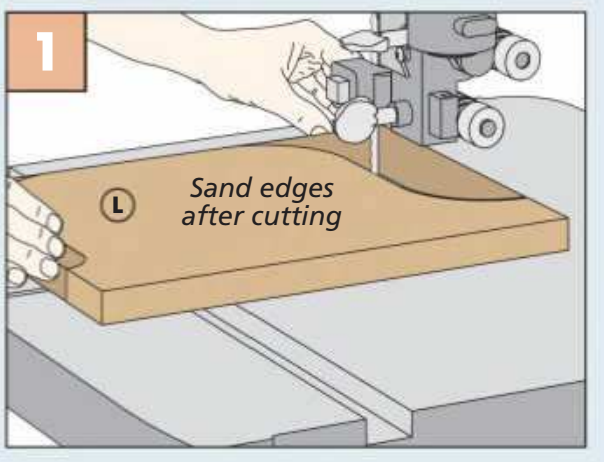

Cut Saddle Sides. After transferring the pattern to a blank, cut the saddle sides to shape and sand the edges.

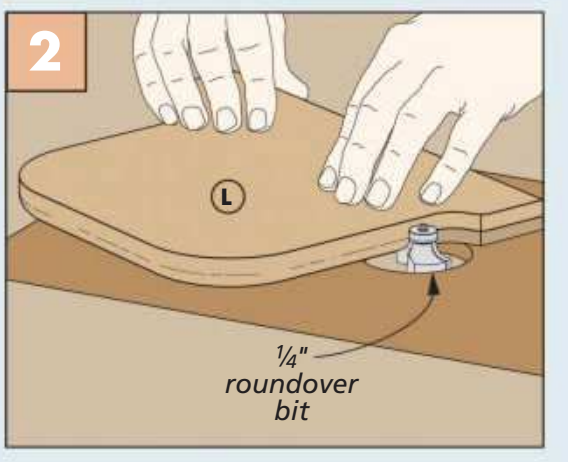

Ease Edges. Move over to the router table to ease the edges of the sides. The inside edges remain square.

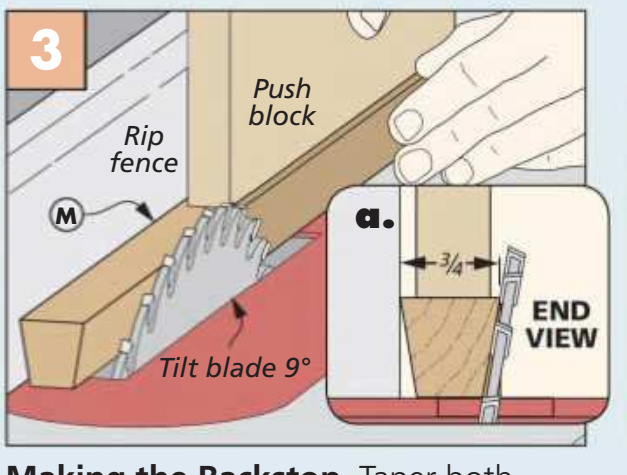

Making the Backstop. Taper both edges of an oversize blank for the saddle backstop.

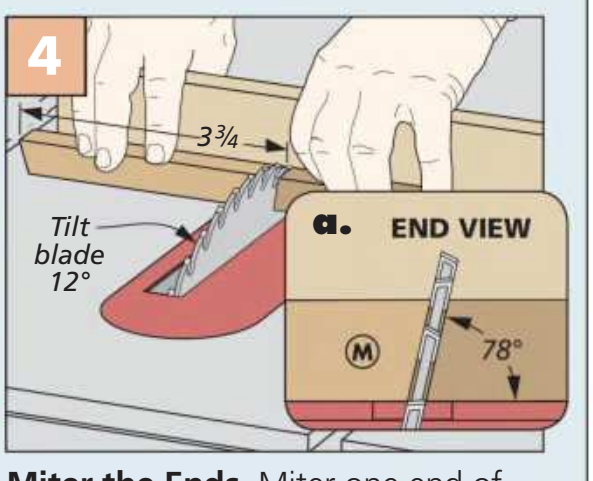

Miter the Ends. Miter one end of the backstop, rotate the piece, and miter the other end to final length.

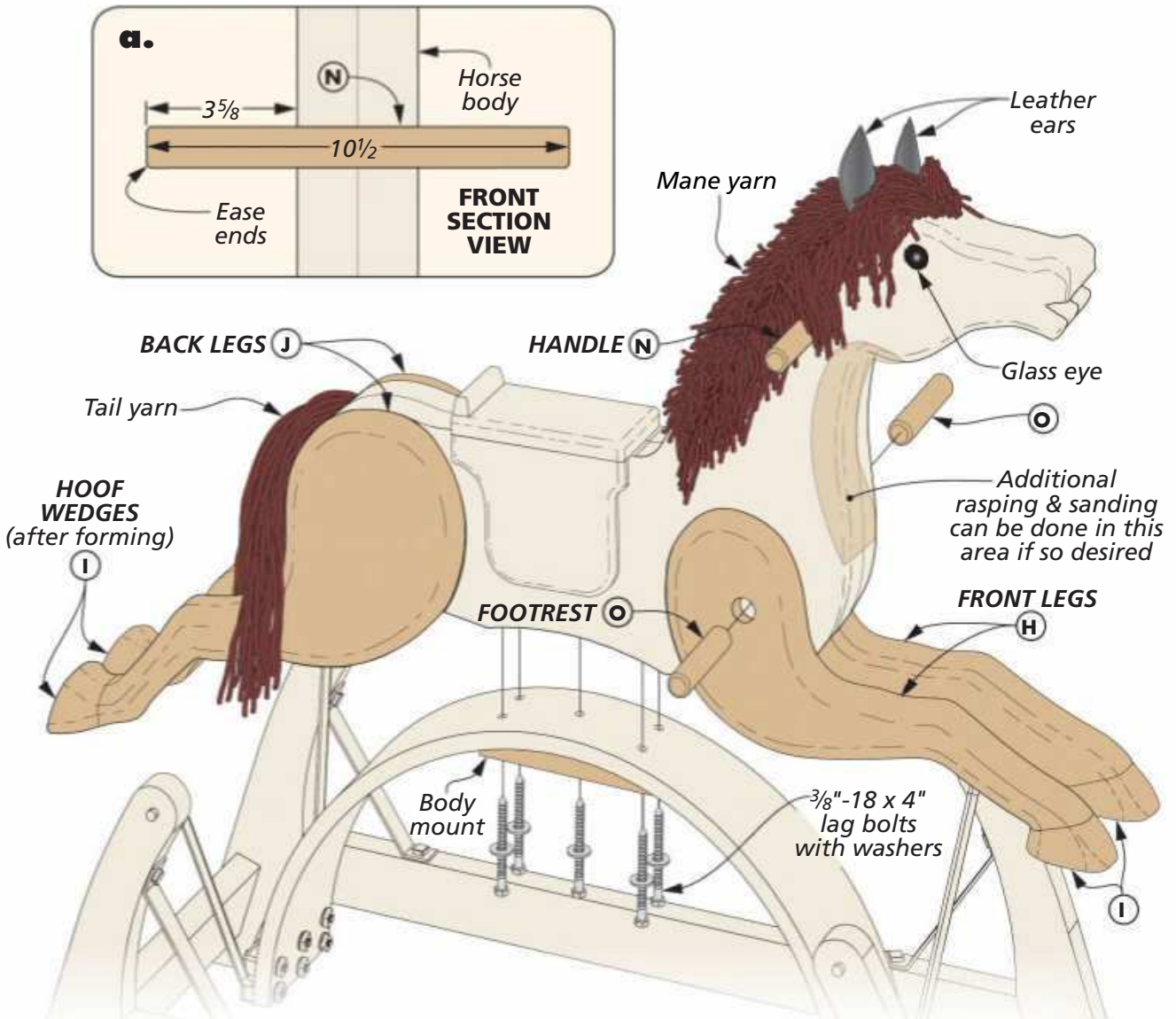

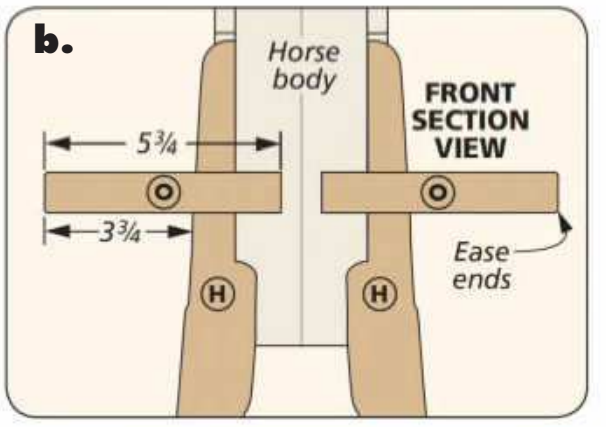

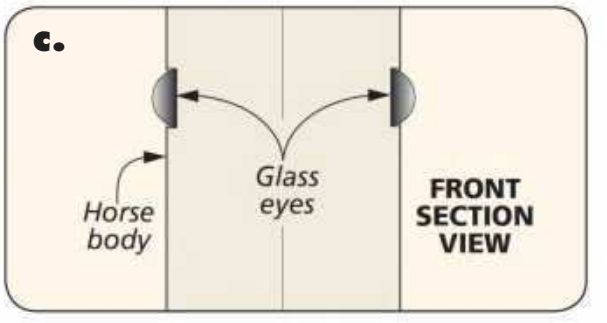

Completing the HORSE

At this point, you've officially rounded the final corner and are in the home stretch. All that's left is to add the final touches that make the horse comfortable for the rider and the details to give your horse some personality.

HANDLES & FOOTRESTS. The handle is straightforward to install. Simply drill a through hole in the body and drive the dowel in place (detail 'a'). Because of the tapered half-lap joint on the back of the front legs, the footrests are just a shade trickier.

As Figure 1 below shows, I used a scrap board under the tapered portion of the leg to prop it up and hold it at the correct angle to drill the hole for the footrest. You can then position the front legs on the body and glue them in place. Use the hole in the leg to finish drilling into the body (Figure 2).

SHAPE & MOUNT. Now's the time to complete all of the hand-forming work using a file, rasp, and sandpaper. This includes the transitions where the legs meet the body, as well as the areas shown at the bottom of page 46 that are tapered for a more realistic look.

Now, use a mallet to drive the footrests home (Figure 3). Finally, go ahead and glue the back legs to the body.

Before mounting the horse to the arch (at left), I painted everything. Sources on page 67 provides the brands and colors for the paints I used.

How-To: INSTALL THE LEGS & FOOTRESTS

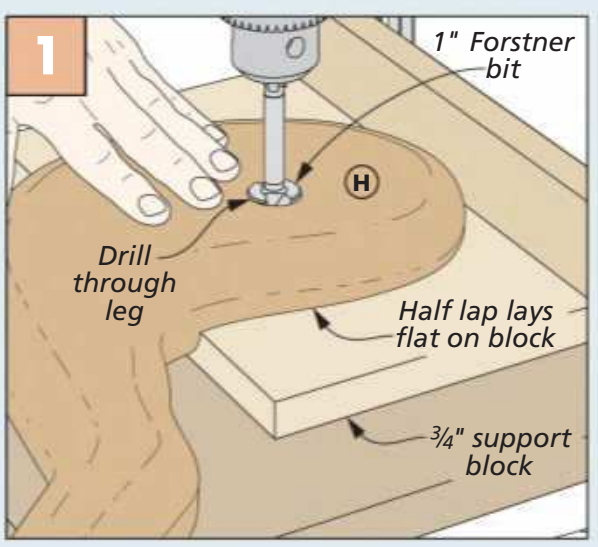

Angled Hole. Use a flat support block to hold the leg at the proper angle for drilling the hole for the foot rests.

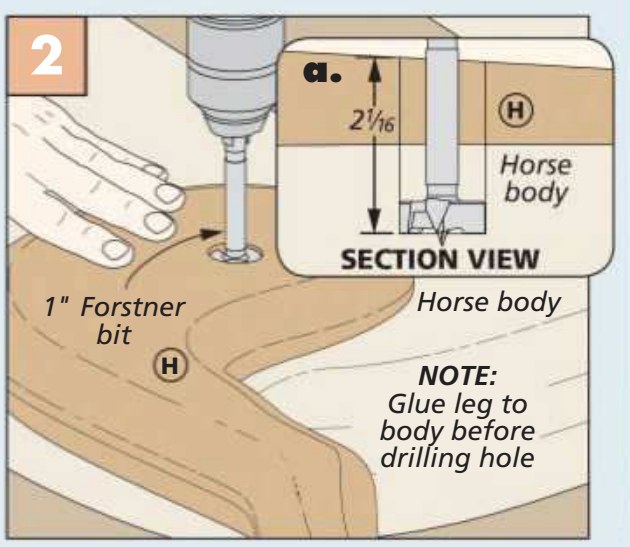

Guide Hole. Glue the leg to the body in the proper position. When dry, continue the hole for the foot rests.

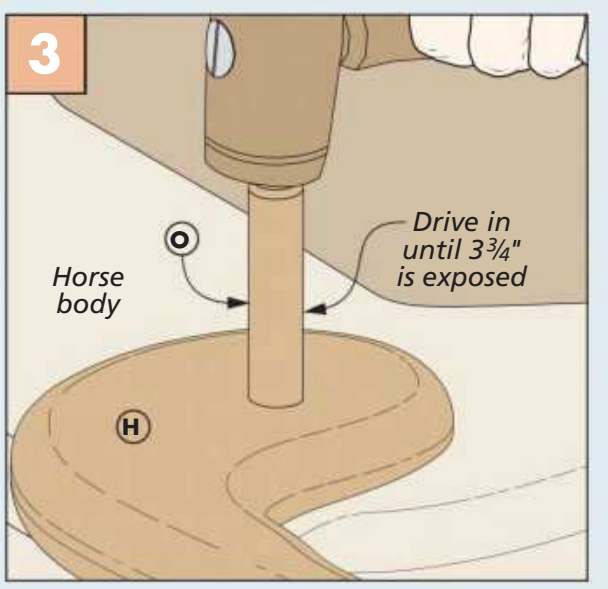

Adding Foot Rests. With the hole extended into the body, use a mallet to drive the foot rests in place.

How-To: ATTACH THE EARS, MANE & TAIL

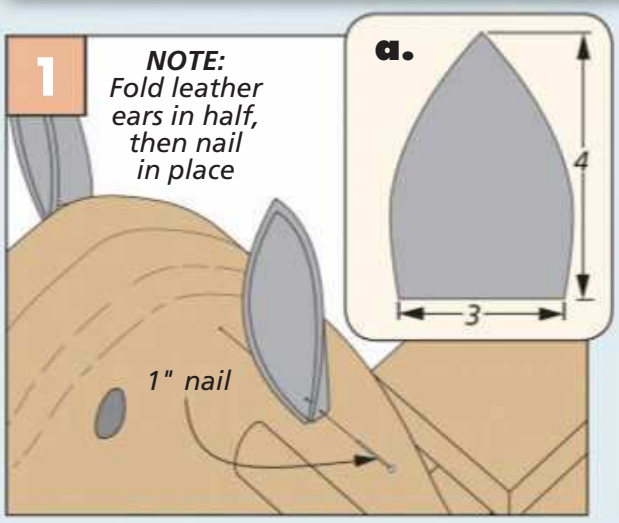

Attaching the Ears. Cut a piece of leather to shape, fold the lower end, and tack to the head with a nail.

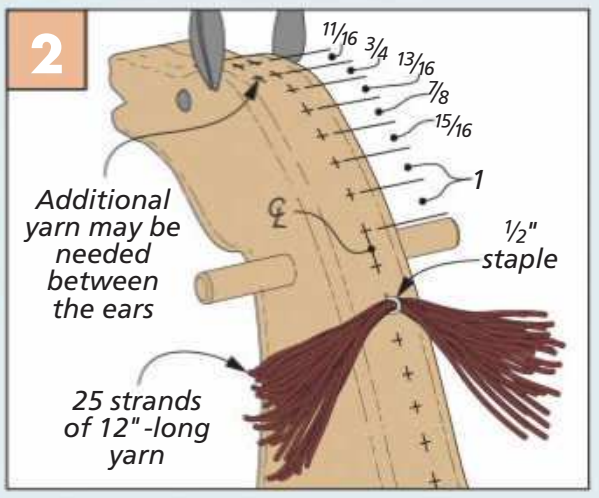

Adding the Mane. The mane consists of several bundles of yarn stapled to the back of the neck.

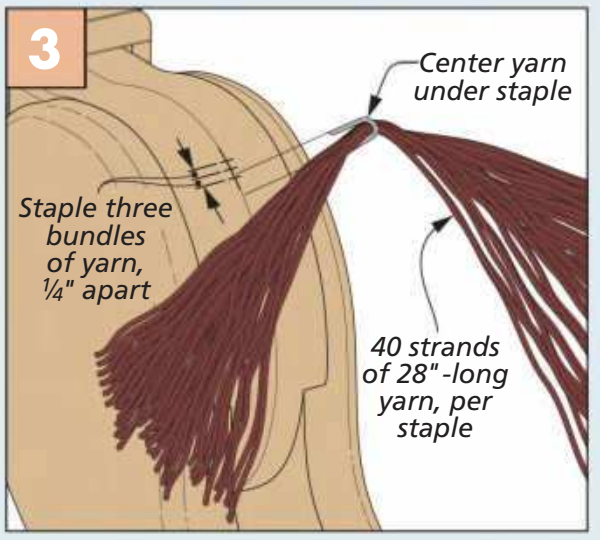

Adding the Tail. Follow the same procedure for adding the tail, but only three bundles of yarn are used here.

EARS & EYES. If you have an artistic flair, you could personalize your horse by using different materials for the ears, mane, and tail. I decided to use strips of leather for the ears (detail above). After cutting them to shape, I folded the lower end and attached them to to the head with nails. The eyes just need a little glue to hold them in the shallow holes you drilled earlier.

MANE & TAIL. For the mane and tail, I used lengths of yarn held in place with staples. The pieces are 12" long, and I bundled about 25 strands together under each staple. Starting at the position shown in Figure 2 above, I placed 15 bundles of yarn up the back of the neck, stopping between the ears. Then, I went back and trimmed some of the ends shorter as they neared the top of the head so as not to cover the eyes. Use the photos on page 40 and 41 as a guide.

The tail is made in the same way, except here, I cut the yarn pieces 28" long and bundled around 40 strands for each of the three staples. Be sure to rest the rocking horse on a solid, flat surface and let some lucky child live out their range-riding dream. W

Materials, Supplies & Cutting Diagram

A	Legs (4)	1 1/4 x 3 1/4 - 18 5/8
B	Rails (2)	1 1/4 x 3 1/2 - 18
C	Stretchers (2)	1 1/4 x 2 3/4 - 39 1/4
D	Rocker Arch Layers (1)	7/8 ply. - 6 x 46
E	Rod Mounts (4)	1/2 - 3/4 x 6
F	Body Mount (1)	1 x 3 1/4 - 8
G	Body (2)	1 5/8 x 20 3/4 - 35 5/8
H	Front Legs (2)	1 5/8 x 8 1/4 - 21 1/2
I	Hoof Wedges (8)	3/8 x 2 3/8 - 4
J	Back Legs (2)	1 5/8 x 9 3/16 - 24 9/16
K	Saddle Top (1)	3/4 x 4 1/4 - 8
L	Saddle Sides (2)	1/2 x 6 - 8
M	Saddle Backstop (1)	3/4 x 3/4 - 3 3/4
N	Handle (1)	1"-dia. dowel x 10 1/2
O	Foot Rests (2)	1"-dia. dowel x 5 3/4

- (2) 7/16"-dia. x 34" Steel Rods
- (4) 1/8" x 1"- 10" Steel Bars
- (2) 1/8" x 2"- 6" Steel Plates
- (8) 5/16"-18 x 1 1/2" Square-head Screws
- (12) 5/16" x 1 3/4" Square-head Bolts
- (12) 5/16" Square Nuts w/Washers
- (2) Glass Eyes
- (5) 3/8"-16 x 4" Lag Bolts w/Washers
- (18) 1/2" Staples
- (1 pc.) 8"x 8" Leather
- (1 skein) Brown Yarn

1/2"x 6" - 36" Poplar (1.5 Sq. Ft.)

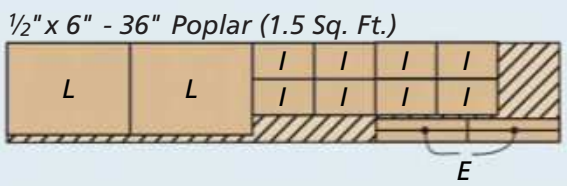

1"x 5" - 24" Poplar (.83 Bd. Ft.)

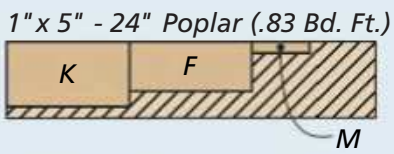

1 3/4"x 4" - 96" Poplar (Two boards @ 5.3 Bd. Ft. each)

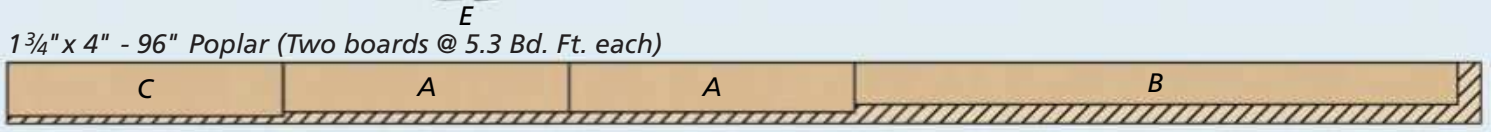

1 3/4"x 7 1/2" - 72" Poplar (Three boards @ 6.6 Bd. Ft. each)

ALSO NEEDED: One - 60" x 60" sheet of 1/8" Baltic birch plywood

1 3/4"x 5" - 96" Poplar (Two boards @ 5.8 Bd. Ft. each)

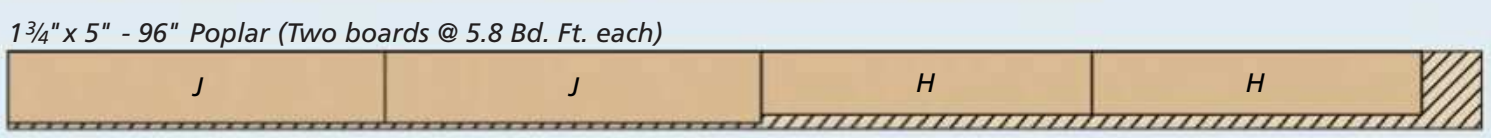

Beyond the basics

Mortising Machine Techniques

One of the best parts of building a project is creating the joinery. It doesn't really matter what joint it is, either. My enjoyment comes from carefully forming the joints and seeing the parts come together and the project taking shape.

Since I added a mortising machine to my shop, I go out of my way to incorporate mortise and tenon joints into projects. There's an element of fun in making square holes. And the completed joint is as classic and tough as they come.

MORTISER BENEFITS. There are any number of methods to make mortises, such as drilling and chiseling or using a router. The main reason I selected a mortising machine is that it forms consistently sized mortises in a short period of time. At the risk of sounding like an infomercial, I also like that the tool is easy to set up. (The box on the next page shows how to install the auger bit and chisel.) Other pluses include its relatively quiet operation and its compact size.

Most of the mortises that I require are the run-of-the-mill kind that a mortising machine excels at. For these joints, the mortise width matches one of the bits that typically come with a machine like this (1/4", 5/16", 3/8", or 1/2").

MORE THAN MEETS THE EYE. As effective as a mortiser is for basic operations, you can be lulled into thinking that's all it can do. As I've used my mortiser, I've learned how to use it to create less-common mortises. Over the next few pages, I'll show my methods for creating large mortises, through mortises, and angled mortises.

If you can create a standard mortise using a mortising machine, you already have the skills to make these more specialized joints. While I'm talking about a dedicated mortising machine, these same techniques apply to drill press mortising attachments, as well.

One final thing, the photo above shows a shop-made X-Y auxiliary table and fence system for the mortising machine. It isn't necessary for this work, but it's a handy upgrade. You can find the plans for it at *WoodsmithPlans.com*.

Written by: Phil Huber

Large Mortises

Back in the day, large industrial mortisers could accept 3"-square mortising bits for building things like rail cars. Chances are you don't need to make mortises that large. But since most hobby workshop mortising machines won't accept a bit larger than ½", you need another method to make big holes.

The idea is to create each side of the large mortise as if you were making a pair of typical mortises side by side, leaving a small amount of waste between the two. The reason for this is it creates smooth, straight walls on the critical part of the mortise — the sides. The thin web of material in the middle supports the bit so it won't drift off course into an adjacent open space.

THE RIGHT BIT. The place to start is selecting the right bit. If possible, I choose a bit that's less than half the width of the mortise. So for a ¾"-wide mortise, I'll grab the ¼" bit.

THE PROCESS. The drawings at right show the steps required to create the mortise. Figures 1 and 2 highlight my preferred way of starting the mortise. Leaving some waste between each hole keeps the chisel on track and the walls of the mortise flat and square.

Once the other side of the mortise has been formed (Figure 3), you can go after the waste in the center section. In Figure 4, you can see it being removed just like the sides. But honestly, you could remove the waste working right down the line. If the chisel deflects slightly, it isn't a big deal because it won't affect the glue surfaces of the joint.

The final step is attending to the bottom of the mortise. Use a chisel to scrape out any remaining chips and smooth the ridges along the bottom.

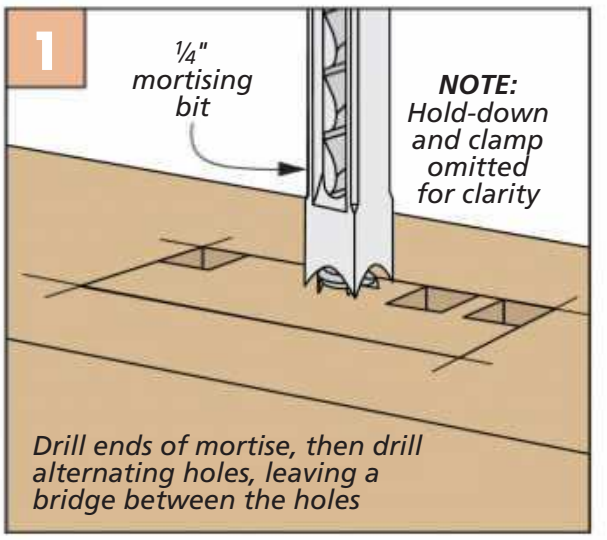

Leave a Space. Leaving a bridge between holes prevents the bit from deflecting into the open space.

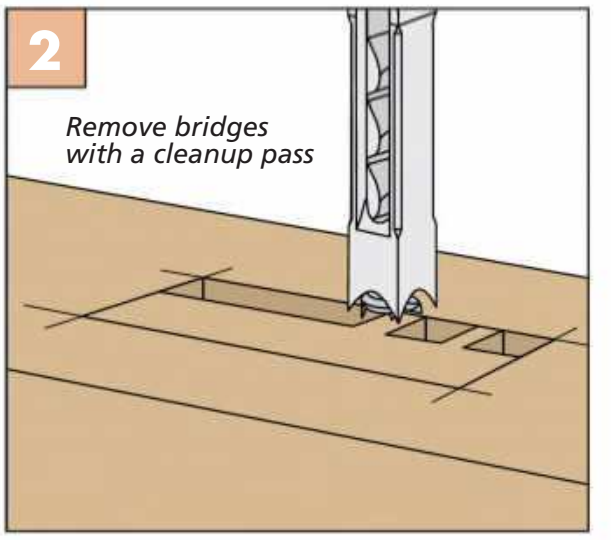

Cleanup Bites. The narrow waste is easily removed by the chisel establishing one side of the mortise.

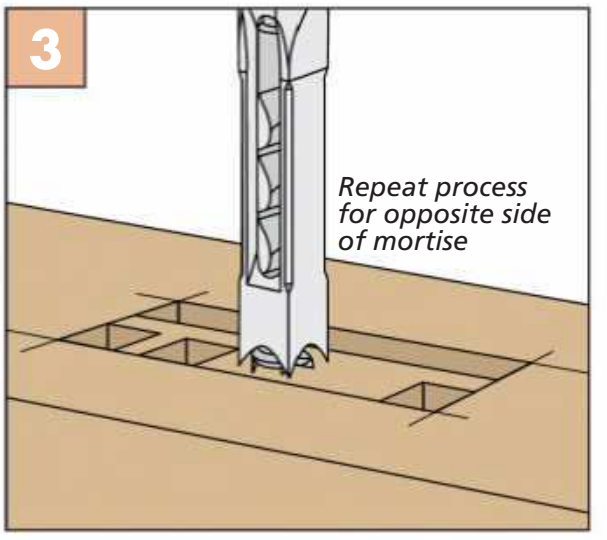

Repeat Performance. Adjust the mortiser fence (or flip the workpiece) to form the other side of the mortise.

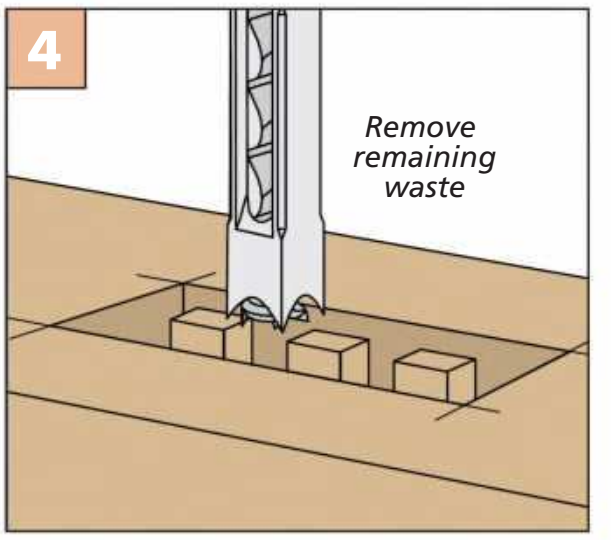

Down the Middle. If the bit deflects while removing the center waste, it won't affect the critical glue surfaces.

How-To: INSTALL THE BIT & CHISEL

A mortiser uses a two-part cutting system to create a square hole. An auger bit spins inside a square chisel to break up and remove most of the waste. As the chisel is pressed into the workpiece, its sharp edges square up the hole.

For this to work, there needs to be a little clearance between the tip of the bit and the opening on the end of the chisel. The two drawings to the right show one setup method. If the material is especially tough, you may try increasing the clearance. This allows the bit to do more of the work and eases the stress on the chisel.

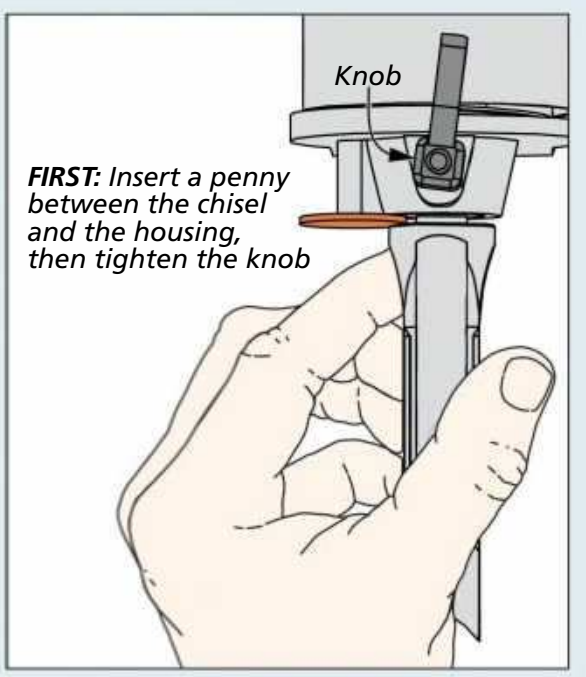

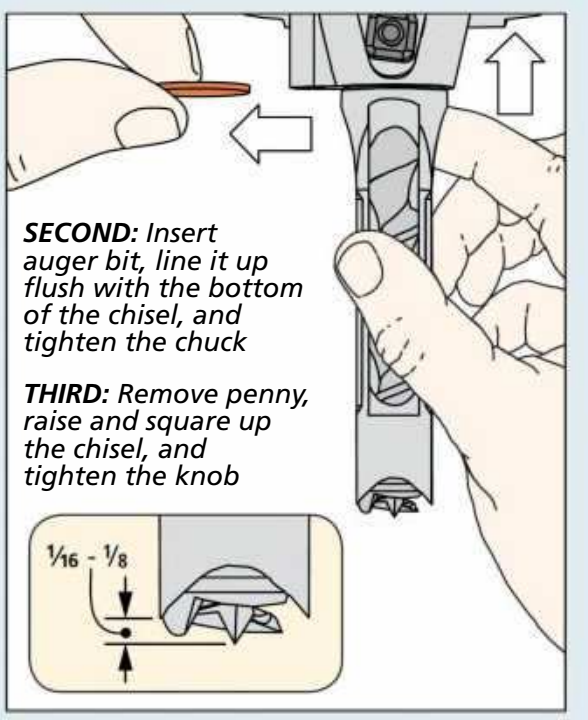

Illustrations: Bob Zimmerman

▲ It's important for any mortise, but make sure the fence is square to the table when cutting through mortises.

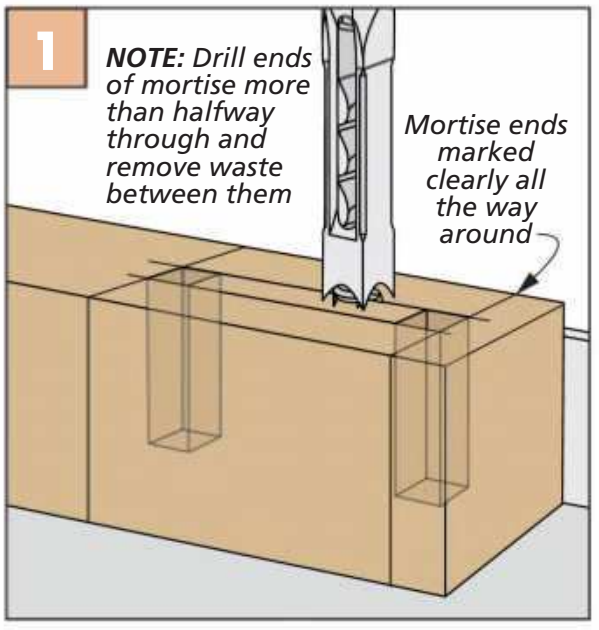

Almost There. Working from one face of the workpiece, create a deep mortise just as you would any other mortise.

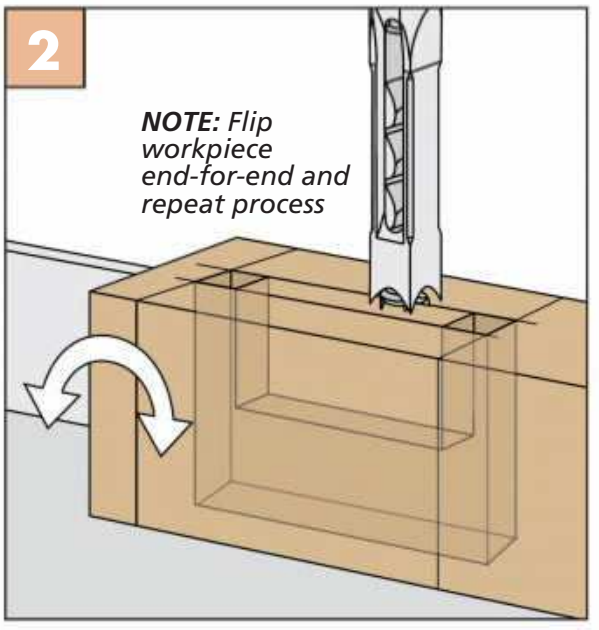

Flip & Finish. Flip the workpiece, keeping the same face against the fence to complete the through mortise.

Through Mortises

Through mortises possess a certain magic. Not only do they increase the strength of the joint compared to a standard mortise, but they also add a decorative element. That's part of the reason through mortise and tenon joints figure so prominently in many pieces of Craftsman-style furniture.

Creating a through mortise on a mortising machine may seem as easy as drilling straight through the workpiece. But I haven't found much success with this method. The force of the chisel and bit driving through the wood can leave ugly tearout on the bottom face — even with a backer. In addition, your mortiser may not have the capacity to create a through mortise in wide parts.

That doesn't mean you have to use another tool. In fact, there are two ways to accomplish the task with the mortiser.

TWO-PASS METHOD. The first technique involves making two sets of cuts from opposing faces of the workpiece. This is shown in Figures 1 and 2 above. Boiled down, all you're really doing is cutting two mortises that happen to meet up inside the workpiece.

The trick is making sure the mortise side walls and ends are aligned. There are three things you can do to meet that goal. The first is to accurately lay out the ends of the mortise on both faces. This is what you'll align the bit to.

Second, make sure the fence on your mortising machine is square to the table, as you can see in the upper left photo. Yes, I know it should be anyway. But in a through mortise, any slight discrepancy can result in uneven side walls. Finally, keep the same face of the workpiece against the fence for each set of cuts, as shown in Figure 2.

I prefer to cut the first mortise two thirds or more through the workpiece (Figure 1). Since the second mortise doesn't have as far to go, it seems to result in smoother mortise walls.

MORTISE & SLICE. The second option for making a through mortise is illustrated in the drawings below. Here you use the table saw to turn an ordinary mortise into a through mortise.

Start with an extra-wide (tall) workpiece. The next step is to chop out a deep mortise making sure it extends slightly beyond the final size of the workpiece, as shown in Figure 1.

Then head for the table saw to trim off the bottom of the workpiece. Voila! An instant through mortise (lower left photo and Figure 2). The only limit with this technique is that your mortise chisel has to be at least as long as the final size of the workpiece.

▼ Trimming away the bottom edge of the workpiece transforms a regular mortise into a through mortise.

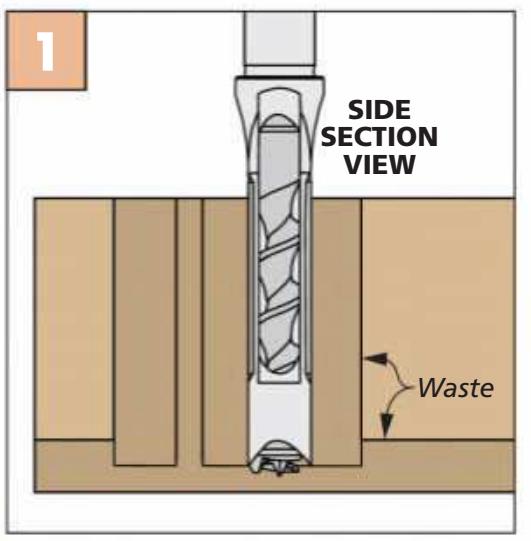

Deep Mortise. Form a deep mortise in an oversize workpiece. Just don't bore through the bottom.

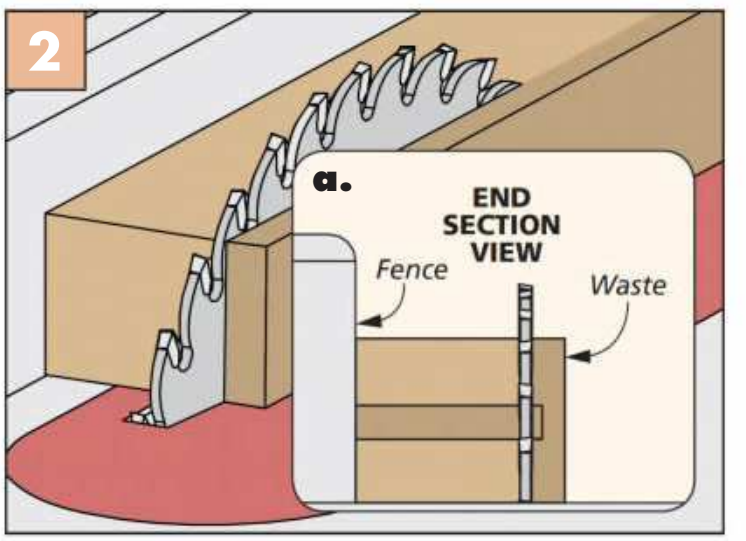

The Big Reveal. At the table saw, trim the workpiece to the final size and expose the through mortise.

Wedged Mortises

Often a tenon gets glued into a mortise and that's that. But some traditional joints are meant to come apart. This allows a large piece of furniture, like a bed or table, to be moved.

The photo at right is one example. A long tenon on a table stretcher extends well past a through mortise. An angled mortise cut into the tenon accepts a wedge to lock the parts together for assembly. As a side benefit, you can tighten the joint with a mallet tap or two if it loosens up from seasonal changes in humidity or heavy use.

We've already tackled the first part of the joint — the through mortise. So to wrap things up, let's look at how to create an angled mortise.

Some high-end mortising machines incorporate either a tilting head or table. If yours has that feature, you're golden. If not, the solution lies in your scrap bin.

THE MAGIC SHIM. Rather than tilt a table or the head of a tool, you can slip a tapered shim under the workpiece, as illustrated in Figure 1. Through simple geometry, the slope of the shim allows you to create a matching angle at the end of the mortise.

As with all things in woodworking, careful layout serves as your road map for plotting the position of the mortise and its angled end. Drawing the mortise shape on the side of the workpiece guides setting up the mortiser.

ANGLED END FIRST. After the layout, cut the shoulders of the through tenon. You can do this at the table saw, band saw, or even with a hand saw. Then set up the mortiser to cut the angled end with the shim under the workpiece. And it isn't necessary to bore all the way through the workpiece. You only need to go deep enough to extend beyond the final tenon size, as in Figure 1.

Completing the mortise is shown in Figure 2. Here you remove the shim to make the remaining cuts square to the surface of the workpiece. Keep in mind that once you remove the shim, you'll have to readjust the depth stop on the mortising machine.

CUT TO SIZE. All that's left is to cut the tenon to its final size. You could do this at the table saw with a dado blade. But on a large workpiece, I find that I have better control when I cut the cheeks at the band saw, instead.

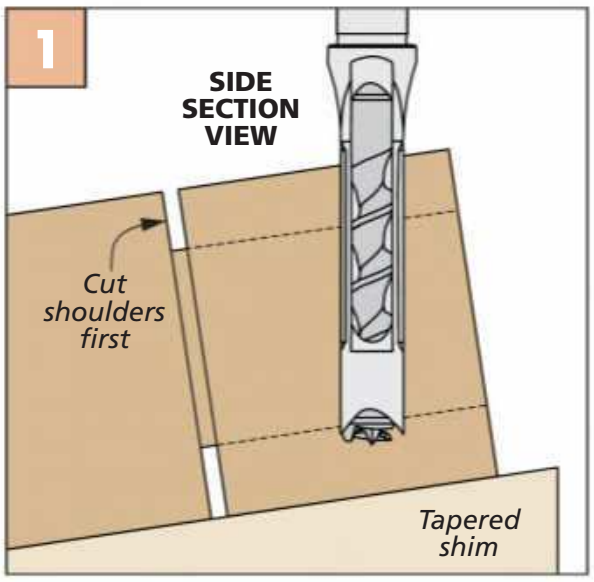

Angled Cut. Slip a tapered shim under the workpiece to tilt the part to cut the angled end of the mortise.

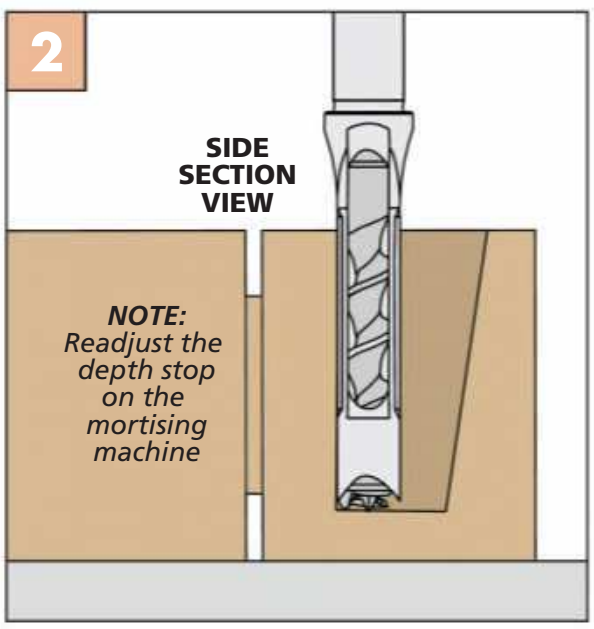

Straight Cut. Remove the shim to finish the mortise. Take care not to cut into the angled end and spoil the slope.

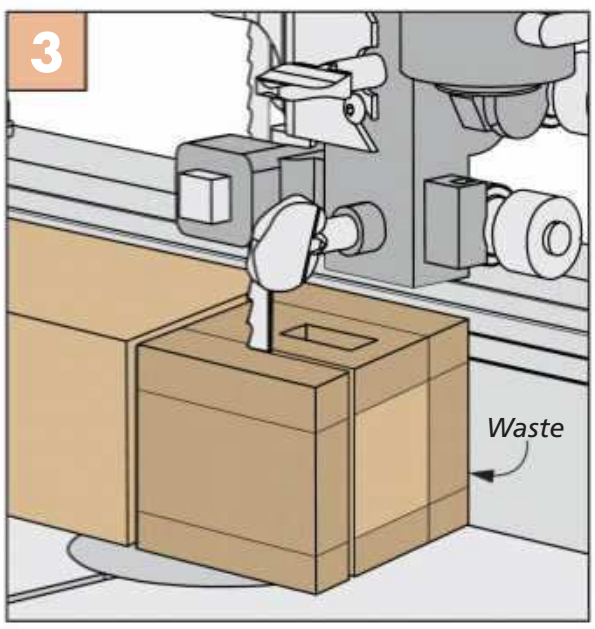

Trim the Tenon. Trimming the tenon to final size reveals the through tenon. Smooth the blade marks to dial in the fit.

▲ A wedge driven into an angled mortise secures the stretcher to the leg of this dining table

Cut the cheeks on the sides of the tenon first, as you can see in Figure 3. Flip the workpiece between cuts to keep the tenon centered (if that's the result you're going for).

Since you already cut kerfs to establish the shoulders, you don't need to set up a stop block to gauge the cut. Once the waste piece falls away, the cut is complete and you can retract the piece.

Finally, turn the workpiece and adjust the rip fence to cut the top and bottom of the tenon. I usually aim for a pretty snug fit straight from the saw. That way, by the time I remove the blade marks with a shoulder plane or sanding block, the tenon passes through the mortise with moderate hand pressure. However, the fit of this joint isn't too critical in the strength of the overall assembly. That job is handled by the wedge that slips into the angled mortise.

Take your time in making this wedge. It should match the angle of the mortise as closely as possible. Then, with a firm blow from a mallet on the wedge, the joint will lock tight.

While a mortising machine is a pretty dedicated tool, it does its job quite well. And when you take the time to learn how to use it to its full potential, it can open up new options for creating all kinds of mortise and tenon joints. W

Safety for your

Pets in the Shop

Woodworking tends to be a retreat for most of us. Spending time in the shop is our relaxation and alone time. But the more I look at woodworking forums or pages on the internet, I notice a recurring theme — a lot of us aren't actually alone in the shop.

Many of us enjoy the quiet companionship of a furry friend. Whether it's a shop dog, cat, goat (no joke, I've seen pictures), or anything in between, there are some considerations to keep in mind to keep your shop buddy, and yourself, safe and comfortable.

▲ *Mutt Muffs* are designed to protect the sensitive hearing of dogs and cats. They're available in a variety of sizes to fit anything from a cat to a Great Dane. For more information on where to order *Mutt Muffs*, see Sources on page 67.

NOISE LEVELS. It's common knowledge that you should protect your hearing against loud noises. And if you think about it, both canine and feline hearing is much more acute than your own. This means that the noise we protect ourselves against is much more detrimental to them.

Originally designed for use in aviation, the *Mutt Muffs* (photos at left) are hearing protection designed for both dogs and cats. While your pet might need time to get used to wearing them, they reduce noise levels by 25 dB.

Another, slightly less embarrassing option (for both you and your pet), is to offer an insulated crate that your pet can go into, as seen in the photo above. A few old blankets covering the crate will offer a quiet retreat for your pet. Of course, your friend may prefer to

Written by: Logan Wittmer

excuse themselves completely as soon as a power tool fires up. In that case, just make sure they have freedom to leave the shop through a pet door or an entry door. Next, let's talk about protecting their lungs.

TOXICITY CONCERNS. It's no secret that sawdust is not good for the lungs. That fact is true for humans and pets alike. While we're standing at machinery that's creating dust, our companions are much closer to the ground where that dust will eventually settle. That means we need to be thorough when it comes to dust collection. In addition, having a crate as previously mentioned will help keep the dust out, and offer a cleaner space for Fido to lie down. Just make sure to include a door flap to help combat dust.

While most dogs enjoy fetching sticks, it's best to reserve this activity for the outdoors. Chewing on wood in the shop can lead to health risks. Keep all scraps in a bin away from nose level. A gentle reminder to go lie down can deter a bored dog and avoid chewing.

As much as we love our animals, let's face it, they like to get into stuff. And this often involves chewing, as seen in the photo above. While chewing on scraps may seem harmless, they're a perfect choking hazard for a dog. Not to mention, many woods are known allergens and can cause respiratory reactions. These woods include walnut, cocobolo, mahogany, and others. It's a good idea to keep all scraps out of reach so pets can't get ahold of them.

BREATH OF FRESH AIR. Along the same lines as sawdust, fumes from finishes or chemicals are even more harmful to a pet's health. The rules here are simple — if you're applying a finish or using a solvent, it's time to let the pets run outside for a bit. This even goes for low-VOC water-based finishes. My own pup suffered a seizure that the vet believes was induced from a water-based polyurethane I applied to hardwood flooring. While she's fine now, it's not an experience I care to relive. So she's kicked out before a can of finish gets opened.

THE FELINE ATTITUDE. Most of the things I've talked about are true for both canine and feline companions. Let's accept facts, however. If you have a cat, your shop is actually their domain. They simply allow you to use it, and enjoy sitting there and watching you. Often, this involves sitting on the bench. When you make a move they don't approve of, they feel it necessary to push a tool off onto the ground.

Best case scenario, this means you have a little sharpening to do. Worst case, however, is you have a cat running around with a cut paw. To protect soft pads, the best practice is to make sure all tools are stored when not in use.

BY YOUR SIDE. Up to this point, we've talked about keeping your pets safe from dangers in the shop. There's one final thing I wanted to touch on and that is the danger to you. Our pets always want to be there with us. While this is the trait that led to the phrase "man's best friend", it can cause a hazard in your shop. A dog or cat underfoot are potential trip hazards. If you trip while carrying large or heavy materials, you and your shop buddy can be hurt.

In addition to trip hazards, it's natural to want to keep an eye on your pet to make sure they're not getting into trouble. However, don't let your pet distract you from your work. The last thing you want is an accident in the shop because you glanced at your pet. Again, this circles back to designating a spot for them to lie down and stay safe, or letting them outside for a while if you've got a flurry of work to do.

The next time you head into the shop with a furry friend, mentally run through the checklist to the left. Just a little bit of thought and some planning will keep both of you enjoying time in the shop together. W

Pet-Friendly Shop Checklist

- ☐ Provide hearing protection or access to a quiet place
- ☐ Relocate pets when toxic fumes exist
- ☐ Keep floor clear of clutter and sawdust that pets might get into
- ☐ Create a space to help keep pets from getting underfoot
- ☐ Store tools safely away when not in use

Illustrations: Bob Zimmerman

Starting out with Hand Saws

Most woodworkers I know combine hand tools and power tools in their shops. But when it comes time to size parts or deal with joinery, they typically turn to their table saw, band saw, or router. That was pretty much how it worked in my shop – until I chose to retire and made a lifestyle change, selling my home and shop to do some cross-country traveling.

I wanted to continue woodworking though. I already had most of what I needed for the tasks I expected to tackle. But I lacked a way to break down stock, bring parts to final size, and create rock-solid joinery without access to the usual power tools. What I needed was a set of hand saws suited to those tasks.

My challenge was deciding which saws would suit my needs while keeping the set to a minimum. Even if you aren't planning to take your workshop on the road like I did, this is a question that any woodworker considering hand saws for the first time is likely to run across.

HAND SAW NOMENCLATURE. One of the first things I did was familiarize myself with the terms used to describe the parts and characteristics of a hand saw, which includes panel saws and back saws. You can discover more about these in the box on the next page.

TOOTH GEOMETRY

While basics are important, the real key to any saw is the geometry of the teeth that actually do the cutting. Why is this geometry so important? Well, it determines how a saw will cut and therefore, what task the saw is most suited for.

For example, does the tooth geometry work better for ripping or making crosscuts? And does the saw end up cutting fast or slow? And once the cut is complete, what kind of finish is left behind on the workpiece? You get the idea.

As I looked at the different saws, I began to understand the information and what details really mattered. For me, the key characteristics of tooth geometry that define a saw boil down to four things – pitch, set, rake, and fleam.

PITCH. Pitch is one of the simplest to understand. The pitch is the number of points per inch (PPI) or teeth per inch (TPI). You don't need to get too caught up in whether it's PPI or TPI since they're related and just a function of where you start the measuring (see drawing below). A hand saw with 6 PPI will have 5 TPI (one less than the PPI).

What's important is the number itself. In general, a saw with fewer teeth per inch will cut faster but leave a rougher surface behind since it has larger teeth with deeper gullets in between. As you may expect, a saw with more teeth per inch leaves a finer surface, but it will take longer to make the cut.

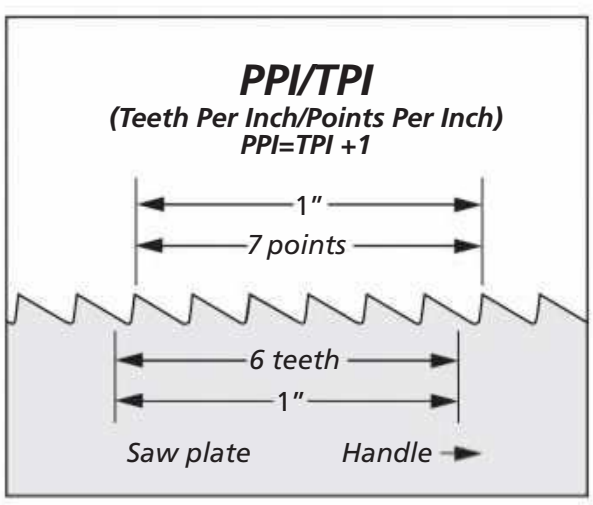

Written by: Bryan Nelson

SET. Another tooth characteristic is the set, or how far each tooth is "bent" to either side. Typically measured in thousandths of an inch, a saw with less set leaves a narrower kerf. This helps the saw track straighter, but it can bind in the kerf. A heavier set leaves a wider kerf. Although it's less likely to bind, the saw may wander off track if you aren't paying close attention to the cut. Plus, since you're removing more material, it can be more of a workout to use.

FLEAM & RAKE. The last two characteristics of tooth geometry to understand are fleam and rake (drawings below). Fleam describes whether the face of the tooth is angled to the side in relation to the plate of the saw. And rake is whether that face is angled forward or backward in relation to the direction of the cut. Instead of specifying the exact angle associated with either of these, the saw is often described as being designed for ripping or crosscutting, as shown in the drawing at right.

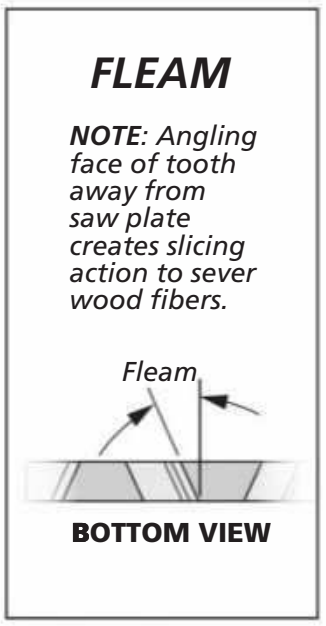

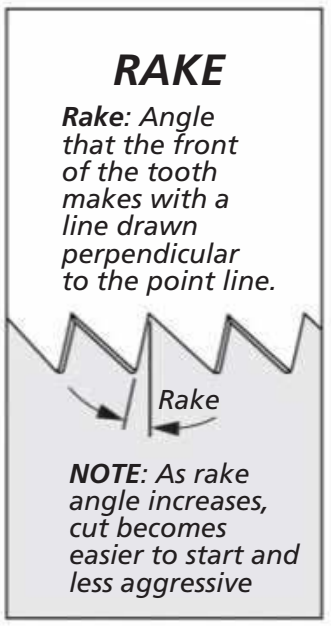

SAWS FOR RIPPING. Rip teeth are filed straight across the face. If you sight down the saw, the teeth look like a row of chisels. They're designed to cut with the grain. Depending on the rake, the saw can be fairly aggressive, removing material quickly. The challenge here can be starting the cut. Angling the face back, or away from the direction of the cut, makes the teeth less aggressive. This makes it easier to start the saw cut, but typically results in slower cutting.

CROSSCUTTING. On saws designed for making crosscuts, the face of the teeth are angled away from the saw plate. This angling is called fleam and configures the teeth so they look more like knife blades. This results in cleaner cuts across the grain. Here again, the degree of fleam affects how quickly you can make a cut and how clean it is.

OTHER CHARACTERISTICS. While the characteristics mentioned above determine how well a saw works for any given task, there are a couple of other things you'll run across that are worth mentioning.

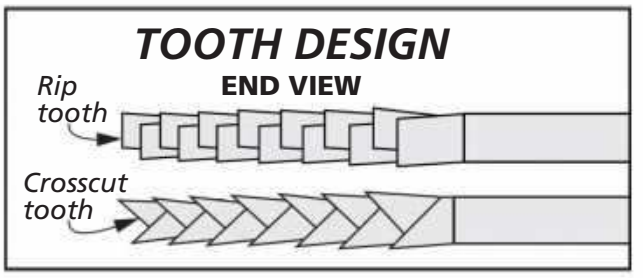

The first is whether the plate of a back saw is rectangular or canted. A canted plate is one where the plate tapers slightly so it's narrower at the toe than it is at the heel. It's typically very slight, maybe ⅛" to ⅜" depending on the size of the saw. It's described as being designed this way to help prevent overcutting. For example, if you're cutting dovetails, once you reach the cutline on the side you can see, you won't have accidentally cut past the baseline on the opposite side due to the cant of the plate.

The other characteristic associated with the saw plate is whether it's taper ground. This is where the saw plate is thinner at the top along the spine and gets thicker near the toothline. You won't find this on back saws. But on panel saws and larger hand saws where the blade will often be "buried" in the cut, this tapered design helps prevent the saw from binding in the kerf.

So how do you sort through all of this? Turn the page to see how I made the decision on which set of saws to add to my tool collection.

Know Your Saw: PARTS & NAMES

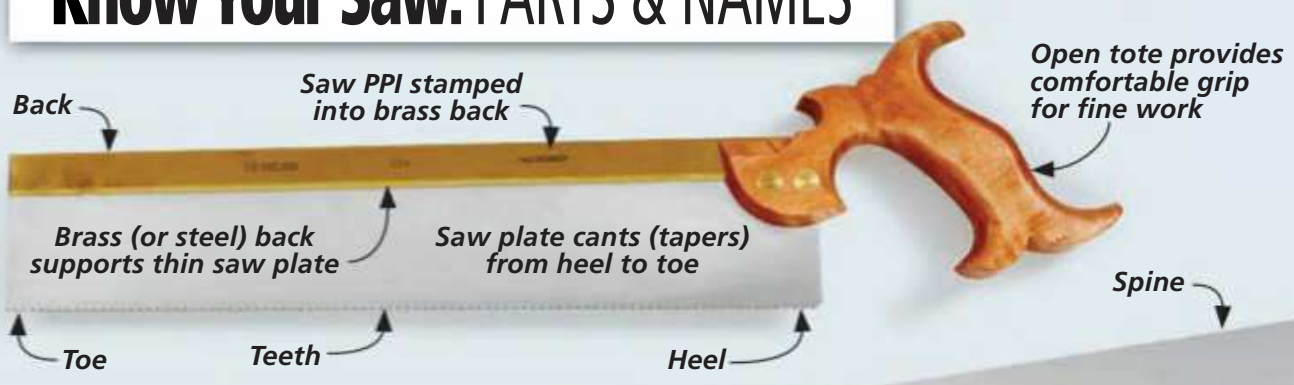

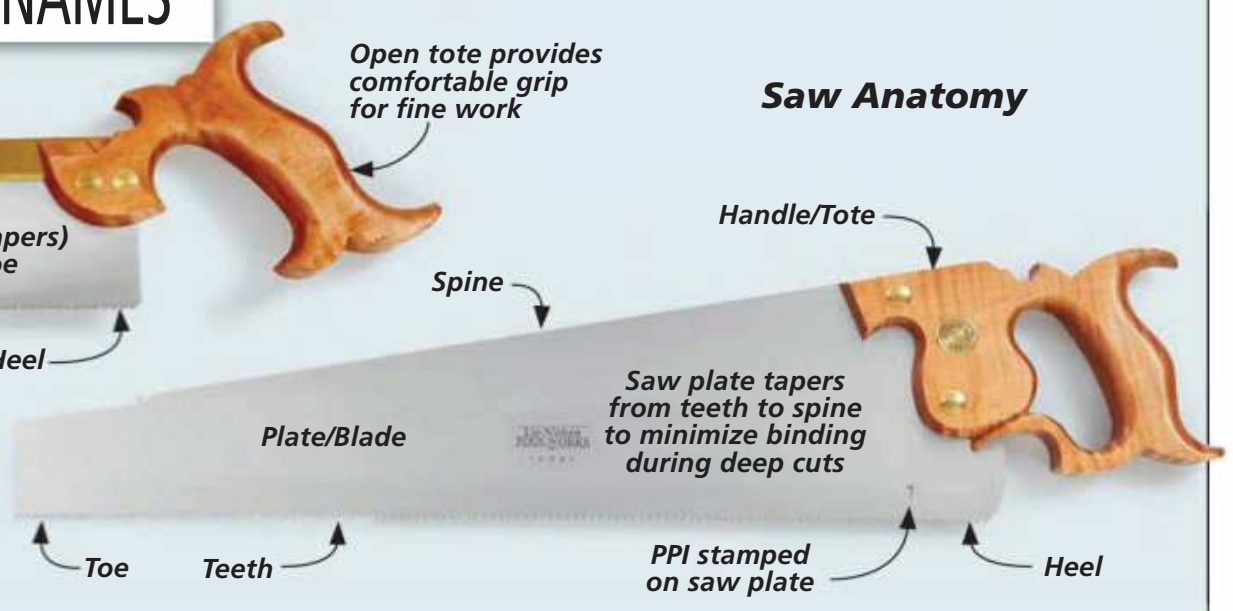

There are a number of terms that help describe hand saws. And being familiar with them will help you understand the two basic types – the back saw (photo above) and the panel saw (photo at right).

While they share some basic elements, it's pretty easy to see the key difference. A back saw has a piece of slotted or folded brass (or steel) along the spine to give it more rigidity. This is important for making accurate cuts with the thin plates used for back saws.

The downside is it limits the depth of cut you're able to make. Since a panel saw doesn't have this spine, you can "bury" the blade to make deeper cuts. This comes into play when working with larger workpieces, like panels, and you're cutting them to length or ripping them to width.

Illustrations: Bob Zimmerman

▲ The teeth of this carcass saw are designed for smooth crosscuts. So you can be sure you'll end up with clean, crisp joinery, like the shoulder cut of the tenon above.

▲ Although its main purpose is crosscutting, this carcass saw works well for rip cuts, like the short cut being shown above to create a notch at the corner of a workpiece.

THE RESULT

You'll find all kinds of saws in a wide range of configurations from a number of manufacturers. To narrow down my search, I used what I learned about tooth configuration to find a set of saws that would meet most of my needs.

MY SET. What I ended up with was a pair of panel saws (rip and crosscut) to assist with breaking down stock (for more on this, check out the box on the next page). To that I added three back saws to deal with bringing parts to final size along with joinery, i.e. the details of working with my project parts.

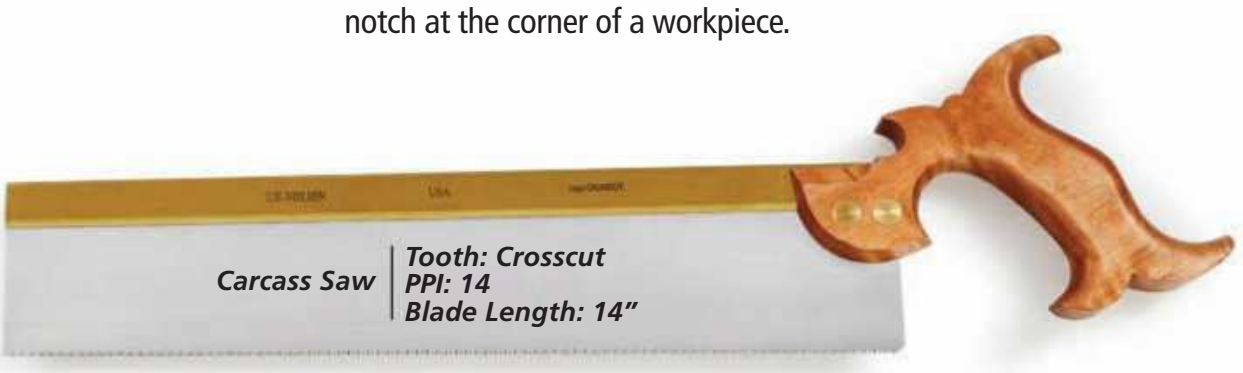

I opted to buy all my saws at one time and from one maker. I found this to be the simplest process. You can easily outfit your shop with hand saws from a range of manufacturers and really customize your collection. Or, you can buy one at a time, adding to your collection over time. Had I opted to do this, the panel saws would have been my last purchase. I felt I could take care of some of the breakdown tasks with my choice of materials or use other tools. But that does beg the question, which saw first?

A lot of woodworkers often buy a dovetail saw as their first hand saw of any kind. It's somewhat a right of passage. But most of us don't cut a lot of dovetails. Our main tasks usually consist of making basic crosscuts and rip cuts, along with joinery like rabbets, grooves, and dadoes.

◄ When it comes to precision joinery, a dovetail saw is a great addition to your hand saw collection.

CARCASS SAW. So instead of a dovetail saw, I'd recommend a carcass saw as your first saw. It's like the jack plane of saws, and for a good reason. Like a jack plane, it's versatile enough for rougher work like cutting parts to size. But you can also make finer joinery cuts, like the shoulder cut of a tenon across a wide piece (photo at upper left). You can do this because a carcass saw fits right in the "middle." It's not too small, and it's not too big.

Tooth configuration plays a key role here. You need to decide whether most of your cuts will be rip or crosscuts. (Or go with a hybrid tooth configuration from those manufacturers that provide that option.) I chose to go with a crosscut tooth design with 14 PPI since I knew I'd be using it mostly for tasks across the grain. But even so, it can handle rip cuts when I need it to (upper right photo).

DOVETAIL SAW. My next choice would be a dovetail saw. In combination with a carcass saw, you'll be able to handle the

bulk of sawing tasks in the shop. Since dovetails primarily involve rip cuts, as you can see in the lower left photo on the previous page, my dovetail saw has a 15 PPI rip tooth configuration.

Again, like the carcass saw, you can make crosscuts, if needed. For example, when completing the workpieces with dovetails, the final cuts I make are crosscuts along the edges of the workpiece, a simple task since I already have the dovetail saw in hand.

TENON SAW. Finally, to complete my trio of back saws, I added a tenon saw. There's no substitute for a tenon saw when you start dealing with large parts and joinery. The extra cutting depth from the wider plate means you can make the deep cuts for tenon cheeks without any problem (upper right photo). And the 11 PPI tooth design makes for fairly fast cuts.

▲ The rip tooth design of this tenon saw means the cuts will be smooth and quick. Plus, its wide plate means you can make deep cuts by hand to create accurate joinery.

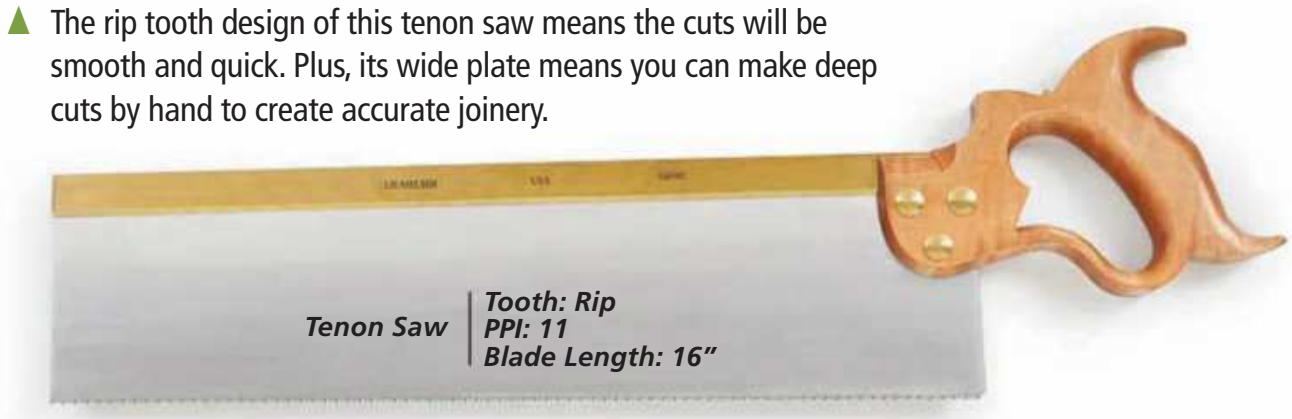

For all three of my back saws, I opted to go with canted blades. I was looking for any help when it came to improving the accuracy of my joinery cuts. With the canted design, I'd be less likely to cut past a baseline I couldn't see. And since all my back saws are canted, they all have the same "feel" during use, making the learning curve less steep.

As you can see, choosing a set of hand saws can be a challenge. But you can narrow the field down considerably by arming yourself with some basic information and knowing the tasks you expect to take on. Once you do, you'll find it won't take long to make your first purchase and start down a satisfying road of making cuts by hand.

Small But Mighty: PANEL SAWS

A typical carpenter's saw has a 26"-long plate. Add in the handle, and the saw gets to be pretty large. That may be fine for most shops. But for my traveling shop, it was too much. I was planning to deal with small workpieces, but I still needed the ability to cut parts to length and rip them to width. For me, that made panel saws a better choice.

Panel saws are smaller than a typical carpenter's saw, making them easy to use around the shop (or on the road) when cuts don't require a larger saw. Their smaller size means they fit well in a traveling toolbox, but they're substantial enough to cut through most hardwoods with relative ease.

To handle both ripping and crosscutting tasks, I selected the pair of panel saws you see in the photos at right. The rip version has 7 PPI for fast, clean ripping. For the crosscut panel saw, I chose a 12 PPI model for smoother crosscuts.

For long, accurate cuts by hand, a rip cut panel saw is indispensible in every shop. ►

◄ Whether it's rough-cutting parts or making a cut to final length, this crosscut panel saw is up to the task.

Shop Notes

Cutting Long Tapers

Long and lean legs with a gentle taper add beauty to the display cabinet on page 28. The "lean" part is the result of tapering the leg. The best way to address this challenge requires the table saw sled you see in the main drawing below. It has a series of cleats to position the leg blank at the proper angle. To hold the blank in place, a couple of toggle clamps are attached to tall blocks.

The blocks for the clamps, and the rest of the parts as well, are plywood. I started by making the base. One edge runs along the rip fence, while the other is against the blade of the saw.

After sizing the cleats, draw the taper on one of the leg blanks. Then position the leg on the sled, set the cleats against the sides of the legs, and screw them to the base (detail 'a').

USING THE JIG. You want to make sure you are tapering the outside faces of the legs. You've got some help on that front though, since the mortises that you've already cut in the legs are on the faces of the legs that remain square.

With that in mind, orient the leg in the jig and clamp it in place as you see in detail 'b'. Once you've made this first pass on all the legs, you can rotate the legs to the other face. Before making the next cut on the legs, you're going to have to adjust the toggle clamps to account for the tapered face. Detail 'c' shows this. Now lock the leg to the sled and complete the tapers.

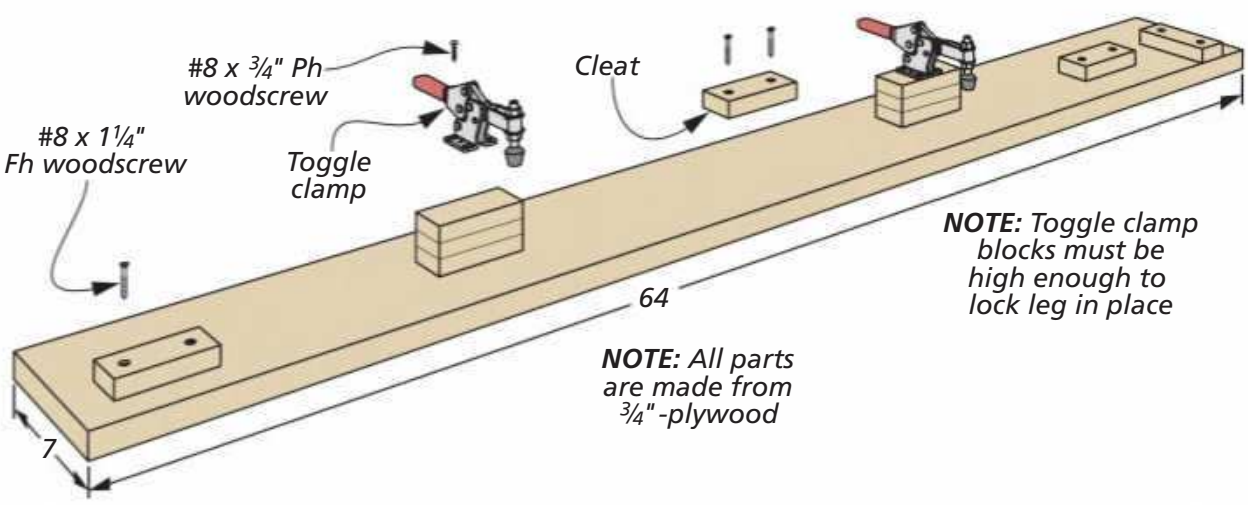

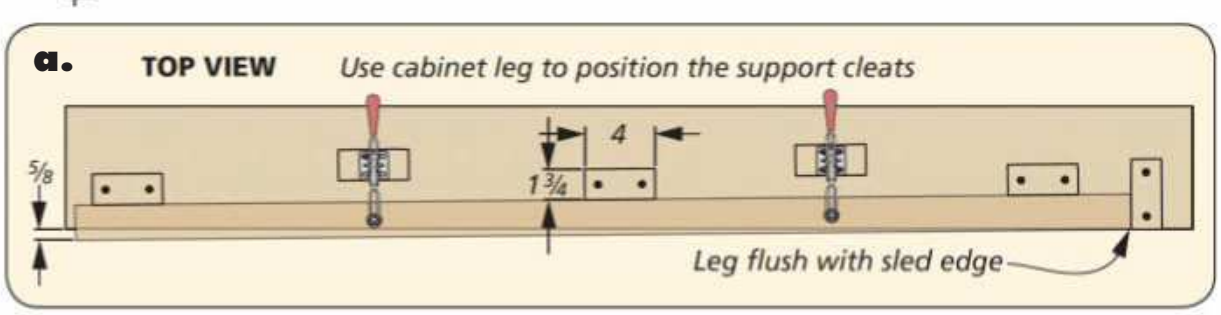

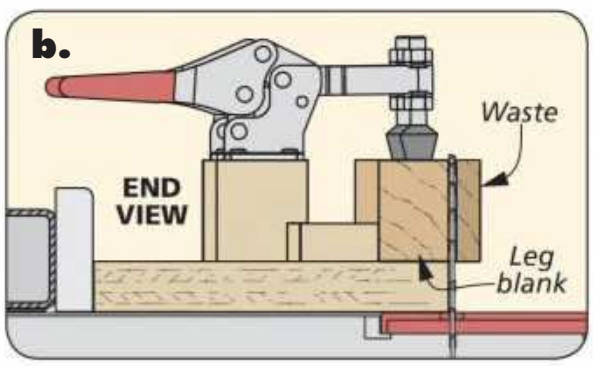

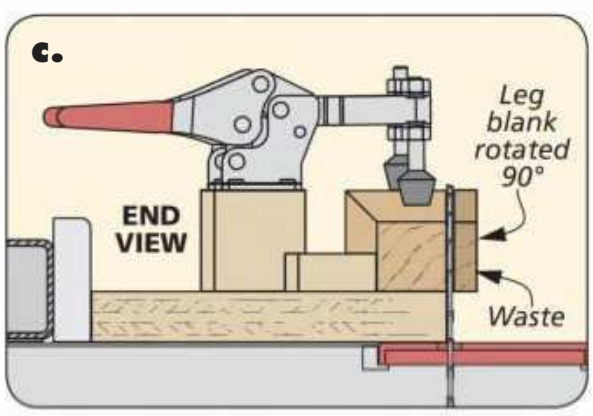

Hinge Mortise Jig

The door that's attached to the case of the display cabinet on page 28 employs invisible hinges that are made by *Soss*. They sit flush in the side of the case and the edge of the door. Mounting these hinges requires some precise mortises in both parts. The jig you see here, combined with your router, a ⅜" straight bit, and a bushing installed in the router base, fits the bill perfectly.

To make the jig, drill out the opening for the bushing (Figure 1), and attach the cleat you see in the drawing to the right. To use the jig, align it to the centerline on the case (Figure 2) and lock it in place with double-sided tape.

I set the bit depth to make the shallow shoulders that support the hinges. Then use a hand drill to drill out the center of the mortise for the hinge base.

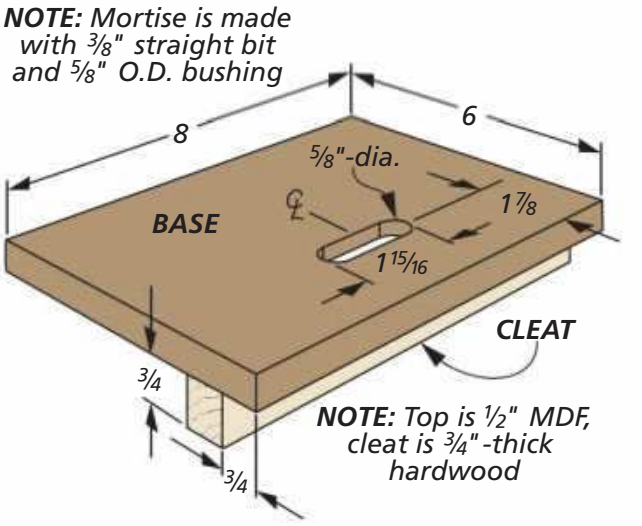

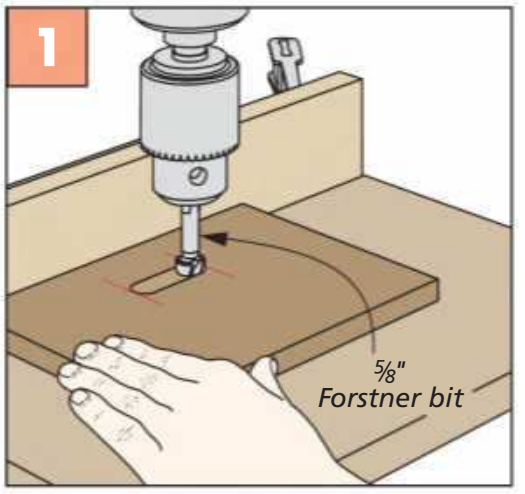

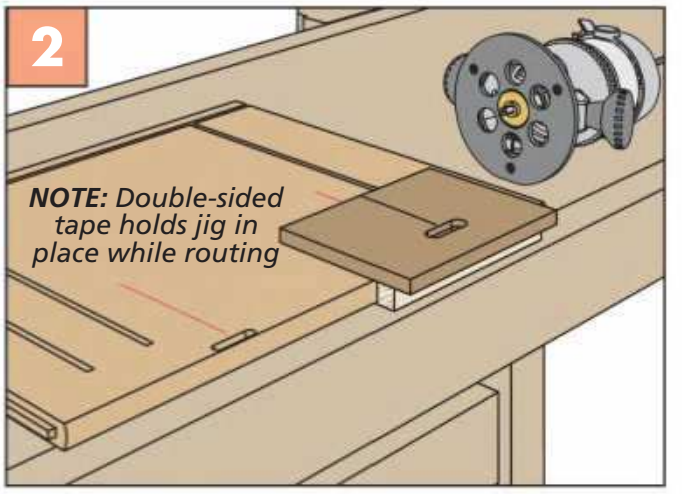

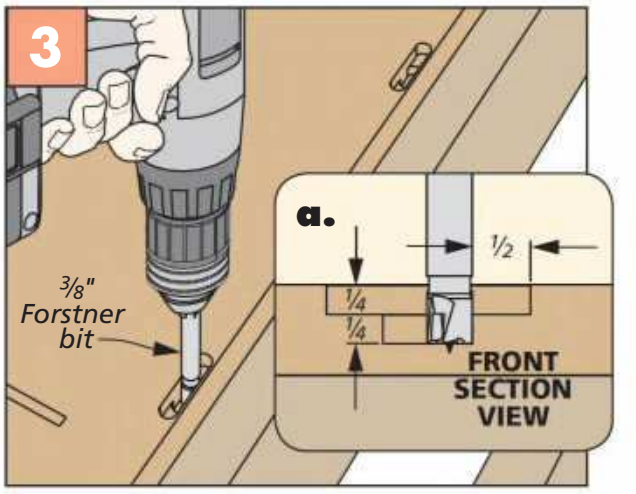

Dowel Drilling Guide

The drawers for the display cabinet on page 28 use an eye-catching rabbeted dovetail to join the fronts to the sides. To add a little beef to the joinery, I pinned the parts together with some dowels.

A guide helps to drill the holes square to the drawer sides. It's made from a scrap of hardwood that's glued to a hardboard cleat. The hole that you drill in the center of the hardwood block provides consistent setback.

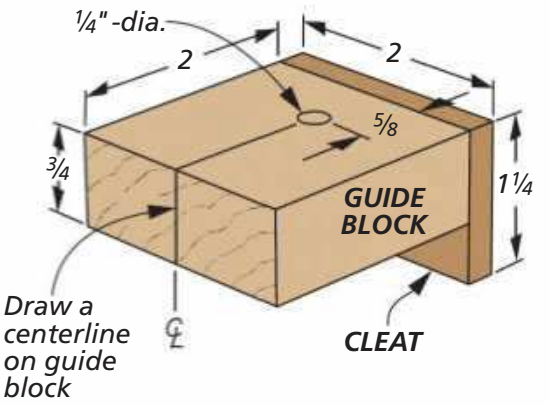

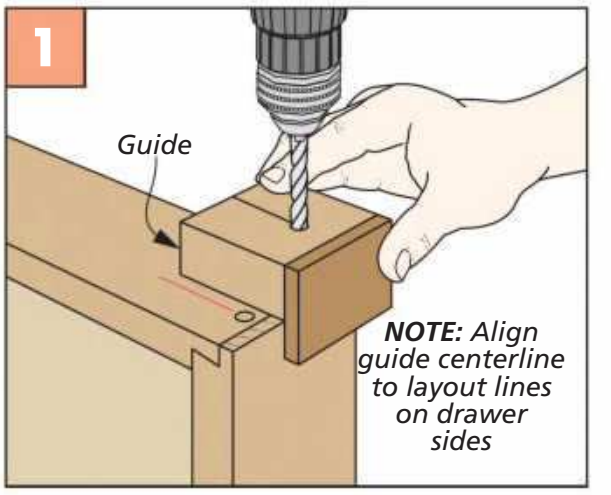

Centerpiece Miter Sled

The tealight candle centerpiece on page 16 has five legs that join together around a center spline. In order to achieve a gap-free fit, each leg is mitered on the end to form a point.

While these miter cuts could be made with a standard miter gauge at the table saw, it would require a lot of fussing with the setup, and rotating the miter gauge back and forth. To speed up the process, I made this simple sled that cuts both miters with one setup.

As you can see, you can cut one miter with the sled and simply move the workpiece to the other side to sneak up on the other miter for a perfect fit. W

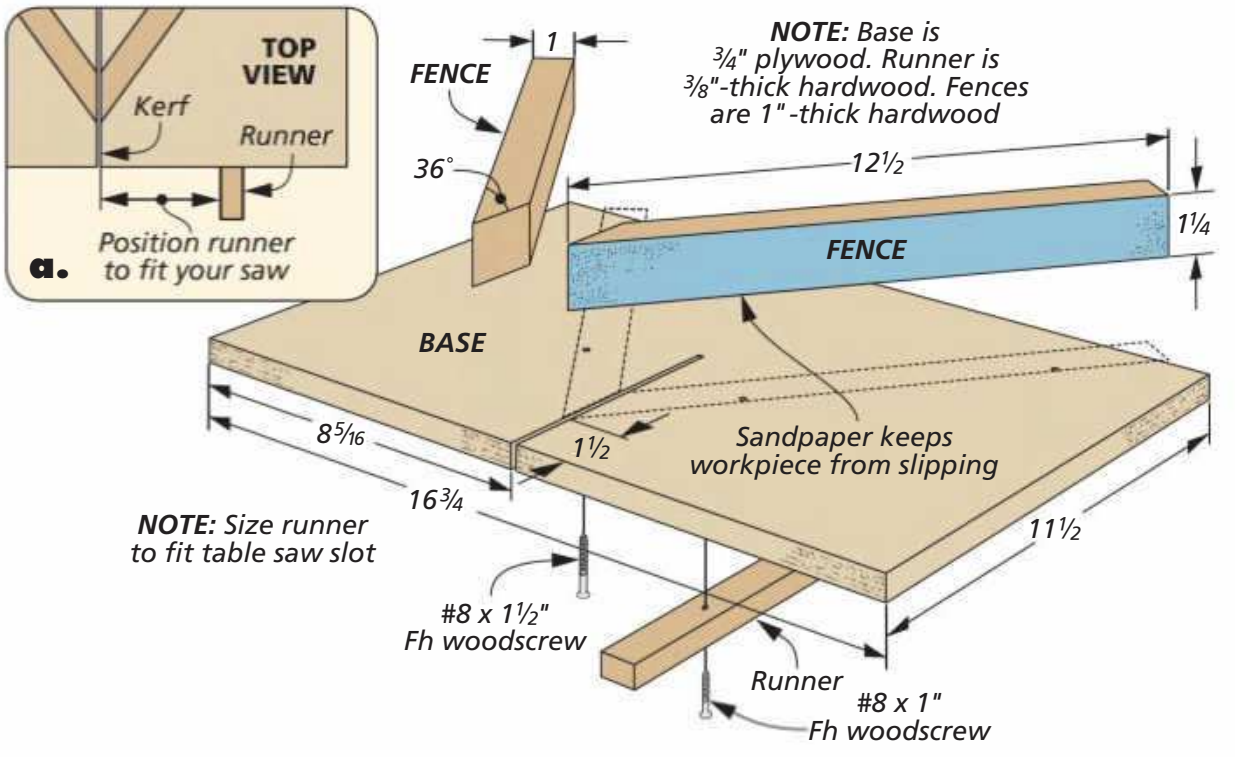

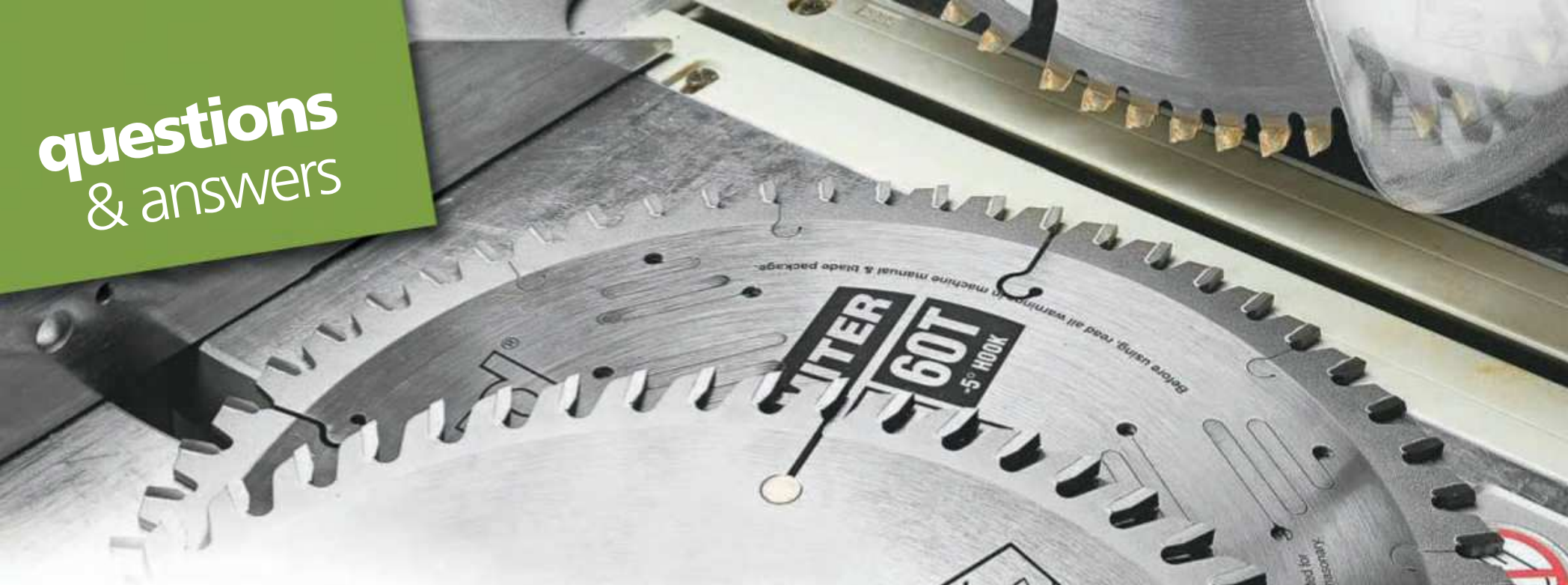

Saw blade Hook Angle

While shopping for saw blades, I've noticed that they all seem to have varying hook angles. Is one hook angle better than another?

Dino Buscetti
Bloomfield, New Jersey

The "hook" of a blade is simply the angle at which the teeth lean forward (or back) when looking at the blade from the side.

Blades are available in a range of hook angles. If the teeth lean forward (so that they face into the cut) the blade is said to have a positive hook angle. If the teeth lean backward, the blade has a negative hook angle. Most saw blades for woodworking have a hook angle ranging from -5° to 20°. Determining which hook angle is best really depends upon the type of saw you're using and the work you're doing.

Miter Saw. If you're buying a blade for either a sliding compound miter saw or a radial arm saw, you'll want to choose a blade with a low or negative hook angle (between 5° and -5°). The reason has to do with control.

The higher the hook angle, the more aggressive the cut. This is because the teeth are biting into the wood at a steeper angle (drawings at left). On a miter or radial arm saw, a high hook angle can cause the blade to "grab" the workpiece and lurch forward uncontrollably. That's why a blade with a low or negative hook angle is a better choice with this type of saw.

MORE POWER. There are a couple of downsides to using a blade with a low or negative hook angle. The lower the hook angle, the more power the blade requires to cut through the material. So if your saw already struggles to make a cut, switching to a negative hook blade might make it seem even more anemic.

The other thing to keep in mind is that you'll probably have to slow down your feed rate when using a blade with a low or negative hook angle. If you don't, you run the risk of stalling the motor.

Table Saw. If you're buying a blade for the table saw, you'll want to select one with a high hook angle (anywhere from 10° to 20°). The higher hook angle will allow you to feed the wood into the blade faster. And since the blade on a table saw remains in a fixed position, there isn't really any danger of the blade self-feeding into the workpiece. You simply control the cutting speed by adjusting the feed rate of the workpiece.

Material. In addition to the type of saw you're using, you'll also want to consider the type of material you're going to be cutting. Generally speaking, the harder the material, the lower the hook angle you want to use.

For cutting softwoods on a table saw, a blade with a 20° hook angle is a good choice. With hardwoods, you'll want to use a blade with a 10° or 15° hook. And if you're cutting plastic laminates or non-ferrous metals, your best bet is a blade with a negative hook angle, whether you're using a table saw or a miter saw.

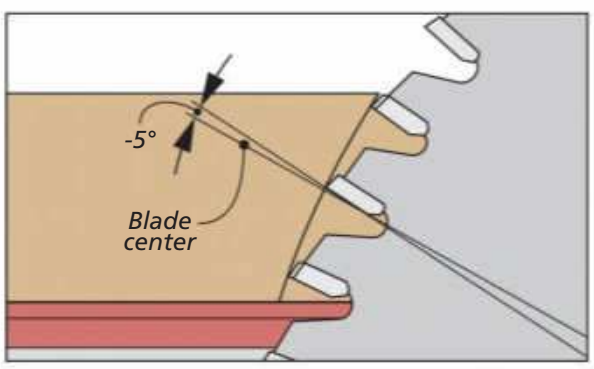

▲ Teeth with a low or negative hook angle strike the wood squarely.

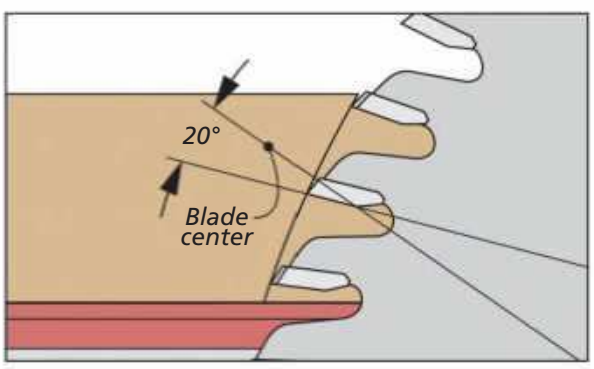

▲ Teeth with a positive hook angle take a more aggressive "bite" into the wood.

hardware & supplies
Sources

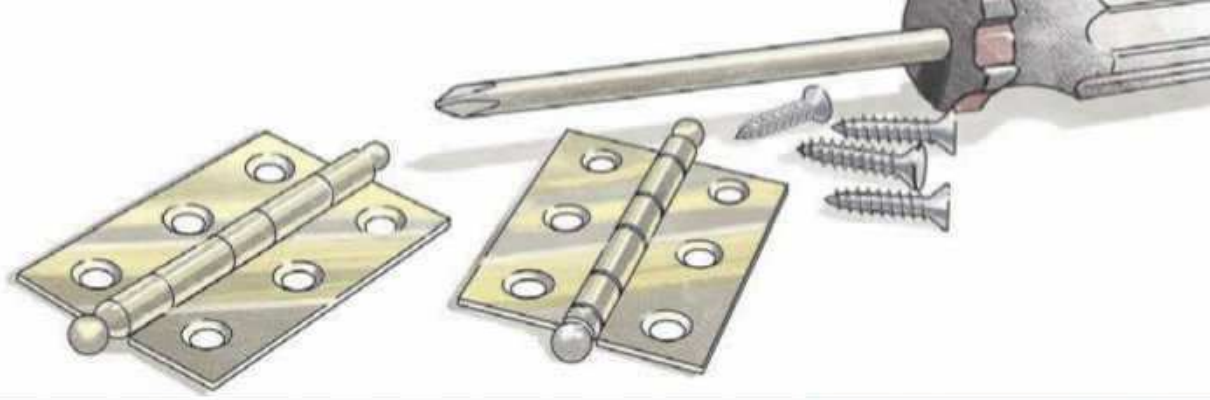

Most of the materials and supplies you'll need to build the projects are available at hardware stores or home centers. For specific products or hard-to-find items, take a look at the sources listed here. You'll find each part number listed by the company name. See the right margin for contact information.

ROUTER TRAMMELS *(p.12)*

- **Jasper Tools**
  M270 Circle Guide. . . . . .
  M200 Circle Guide . . . . . .
  Model 300 Pro Circle Guide . . .
  M400 Circle Guide. . . . . .

The *Jasper Tools* web site has a directory of retailers that sell their products. Trammels and circle cutting jigs are also available from *Rockler* and *amazon*.

SAFE-T-PLANER *(p.14)*

- **StewMac**
  Safe-T-Planer 0486
  Replacement Cutters . . . 0486-C

TEALIGHT CENTERPIECE *(p.16)*

All of the hardware for the tealight candle centerpiece is available at most hardware stores and home centers.

HOBBY BOX *(p.22)*

To finish the hobby box, I started by detaching the swing-out trays and removing the drawers. The entire hobby station was then given multiple coats of spray lacquer.

DISPLAY CABINET *(p.28)*

- **Lee Valley**
  Double Ball Catch . . . 00W12.01
  Shelf Pins 63Z06.04
  Shelf Pin Sleeves 63Z06.06
  Soss Hinges 00H02.02
- **McMaster-Carr**
  12" Brass Rod. 8859K54
  Zinc Coil Spring. 9657K265
  Spring Steel Strip. 9074K62
- **Constantine's Wood Center**
  Convex Router Bit 85411

The tempered glass shelves were custom cut by a local glass supplier. Two coats of spray lacquer were applied to the finished cabinet.

ROCKING HORSE *(p.40)*

- **Glass Eyes Online**
  Safety Eyes (Solid Black) . 24mm

All of the milk paint used on the rocking horse is made by *General Finishes*. The body of the rocking horse was painted with "Queenstown gray." I then used a simple sponge technique to apply two lighter tones of gray called "driftwood" and "seagull gray" to give the body its dappled appearance. The hooves used "lamp black." The saddle is "dark chocolate" and the base is painted with "brick red."

PETS IN THE SHOP *(p.58)*

- **Amazon**
  Mutt Muffs B002CZQ1TA

MUST-HAVE HAND SAWS *(p.60)*

All of the hand saws for this article were purchased from *Lie-Nielsen*. Saws are also available from *Lee Valley*, *Tools for Working Wood*, and other specialty saw makers and retailers.

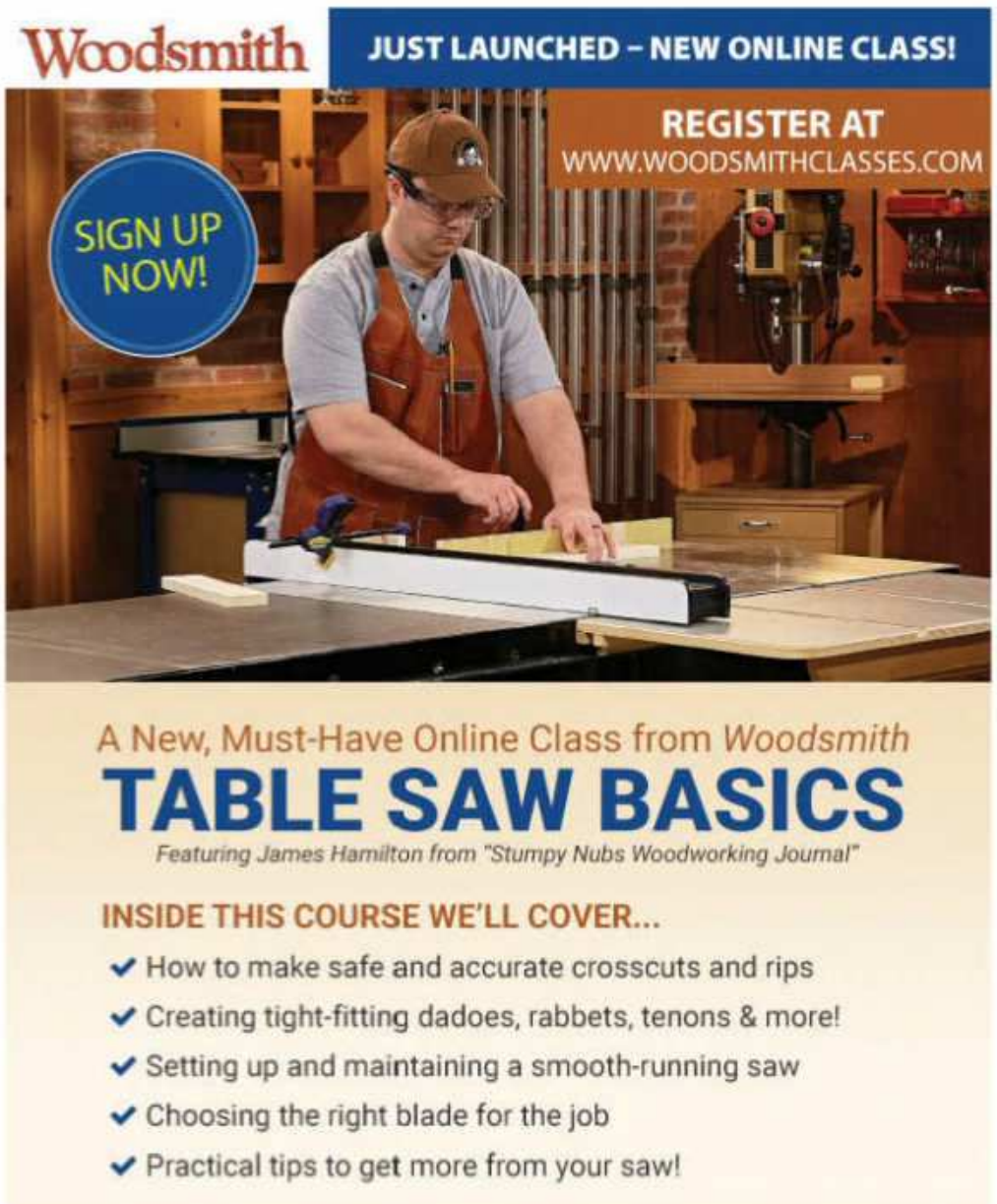

MAIL ORDER SOURCES

Project supplies may be ordered from the following companies:

amazon.com

Constantine's Wood Center
954-561-1716
constantines.com

General Finishes
800-783-6050
generalfinishes.com

Glass Eyes Online
glasseyesonline.com

The Home Depot
800-466-3337
homedepot.com

Jasper Tools
713-681-9912
jaspertools.com

Lee Valley
800-871-8158
leevalley.com

Lie-Nielsen
800-327-2520
lie-nielsen.com

McMaster-Carr
630-833-0300
mcmaster.com

Rockler
800-279-4441
rockler.com

StewMac
800-848-2273
stewmac.com

Tools for Working Wood
800-426-4613
toolsforworkingwood.com

looking inside
Final Details

▲ *Hobby Station.* Organize all of your hobby or crafting supplies with this customizable workstation. Step-by-step instructions can be found starting on page 22.

▲ *Candle Centerpiece.* Need a gift idea for this holiday season? This tealight candle centerpiece might just be the perfect solution. Complete plans start on page 16.

▲ *Rocking Horse.* You'll light up a young child's face when you build our take on this classic woodworking project. We'll walk you through the construction beginning on page 40.

◄ *Display Cabinet.* Don't let the elegant appearance fool you — this modern cabinet packs plenty of storage, as well. The woodworking challenges will satisfy the most discerning craftsman. Turn to page 28 to get started.

Woodsmith

Back Issue Library **Online**

An Incredible **VALUE!**

- Access every issue of Woodsmith ever published — over 228 complete issues!
- Get over 4,000+ projects, tips and technigues.
- Enjoy instant online access on your computer, laptop — even tablet.

Order for **$79**

Get the USB Flash Drive for $20 MORE!

LEARN MORE at www.woodsmithlibrary.com

Sign Up for Free Weekly eTips

Desktop

- Get a video tip sent to you every week
- Includes a printable, step-by-step tip
- Ready when you are — on any device

Laptop

Tablet

Smartphone

Sign up today at **Woodsmith.com**